ÜSTÜNEL

Dalgıç Pompa-Submersible Pump

ÜRÜN KATALOĞU

PRODUCT CATALOG

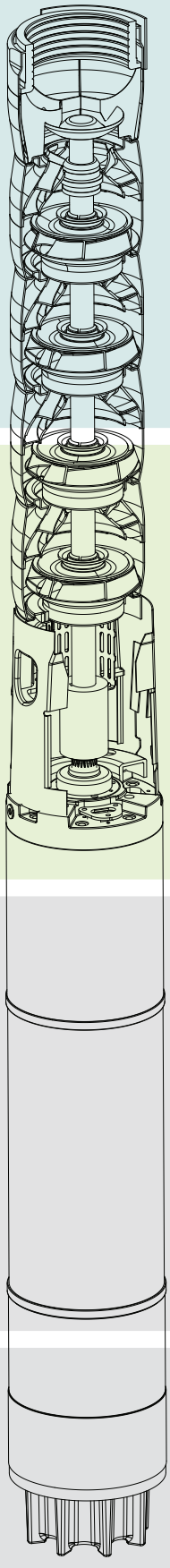

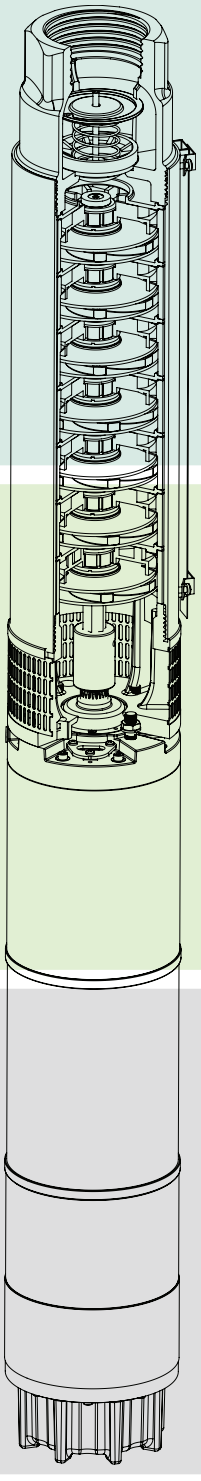

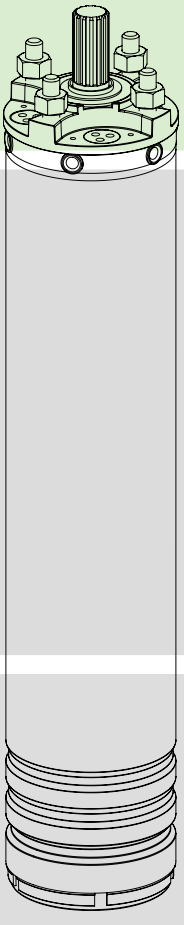

ÜSTÜNEL
Dalgıç Pompa-Submersible Pump

HAKKIMIZDA

1978 yılında, İzmir 3. Sanayi Sitesinde 100 m^2'lik atölyede 5 kişi ile faaliyete başlayan Üstünel, 15.000 m^2'lik kapalı alana sahip fabrikalarında suya yön veren çözümler üretmektedir.

Üstünel, 1979 yılında Şaft Milli Pompa, 1980'li yıllarda dalgıç pompa üretimine başlamıştır.

1989 yılında Türkiye'de Dalgıç Motor imalatını gerçekleştiren ilk firmalardan biri olarak, üretim adına ciddi bir adım atmış ve İzmir Atatürk Organize Sanayi Bölgesi'nde bulunan 3.000 m^2'lik fabrikasına geçmiştir.

2001 yılında Türkiye'de ilk Paslanmaz Dalgıç Pompa'yı üretmiş ve 2005 yılında da Türk Patent Enstitüsü'nden Faydalı Model Belgesi'ni alarak Paslanmaz Pompa sektöründe girişimcilik rolünü üstlenmiştir.

Üstünel Test ve Deney Laboratuvarı, 2018 yılında TÜRKAK (Türk Akreditasyon Kurumu) tarafından TS EN ISO/EC 17025 standartı kapsamında akredite edilmiştir. Üstünel AR-GE Merkezi 2019 yılında, Sanayi ve Teknoloji bakanlığı tarafından tescil edilmiştir. Üstünel, ürün kalitesini arttırarak faaliyetlerine devam etmektedir.

ABOUT US

Üstünel was established with 5 people in a workshop of 100 m^2 in İzmir 3rd Industrial Zone in 1978. Üstünel produces water-orienting solutions with a closed area of 15.000 m^2.

Üstünel started to produce shaft pumps in 1979 and submersible pumps in 1980s.

As one of the first submersible motors producers in Turkey, Üstünel moved to its factory in İzmir Atatürk Organized Industrial Zone in 1989.

Üstünel has been produced the first Stainless Submersible Pump in Turkey in 2001 and took the role of entrepreneurship in the Stainless Pump sector by obtaining the Utility Model Certificate from the Turkish Patent Institute in 2005.

Üstünel Test and Experiment Laboratory was accredited by TÜRKAK (Turkish Accreditation Agency) in 2018 within the scope of TS EN ISO / EC 17025 standard. In 2019, Üstünel R&D center was registered by the Ministry of Industry & Technology, as one of the limited R&D centers of Turkey. Üstünel continues its activities by increasing its product variety and quality.

ÜSTÜNEL
Dalgıç Pompa-Submersible Pump

İndeks

POMPALAR

MOTORLAR

HİDROFORLAR

*Ölçü ve model değiştirme hakkımız saklıdır.

Index

PUMPS

MOTORS

VERTICAL MULTISTAGE PUMPS

**We reserve the right to make changes in size and model.*

ÜSTÜNEL
Dalgıç Pompa-Submersible Pump

POLİKARBONAT DALGIÇ POMPA

POLICARBONATE SUBMERSIBLE PUMPS

Kullanım Yerleri

Su Temini
Sulama Sistemleri
Zemin Suyu Alçaltma
Basınçlandırma
Endüstriyel Uygulamalar
Temiz, içinde lif ve katı maddeler bulunmayan, agresif sıvıların pompalanması

Applications

Raw Water Supply
Irrigation Systems
Groundwater lowering
Pressure Boosting
Industrial Applications
Pumping of clean, thin and non-aggressive liquids without fibres or solid particules

Çalışma Koşulları

Maksimum Sıvı Sıcaklığı	35°C
Maksimum Kum Miktarı	25 gr/m³
Motor Koruma Sınıfı	IP68
Maksimum Çalışma Sesi	70dB
Maksimum Kalkış Sayısı	20 (kalkış/saat)
Motor Dönüş Yönü	İki Yönlü

*Deniz suyu uygulamalarında katadik koruma önerilmektedir.

Operating Conditions

Max. Liquid Temperature	*35°C*
Max. Sand Content	*25 gr/m³*
Motor Protection Class	*IP68*
Max. Operation Sound	*70dB*
Max. Starting Number	*20 (start/hour)*
Motor Rotation Direction	*Bidirectional*

**Cathodical protection is suggested for seawater applications.*

Pompa Çeşitleri / *Pump Range*

Tipi	Type	S4 P2	S4 P4	S4 P6	S4 P8	S4 P12	S4 P18
Çıkış Bağlantısı	*Outlet Connection*	1/4"	1/4"	2"	2"	2"	2"
Mil Çapı (mm)	*Shaft Diameter (mm)*	11	11	11	11	11	11
Su Verebilme Kapasitesi (m³/h)	*Water Capacity (m³/h)*	2	4	6	8	12	18
Emiş ve Çıkış: Paslanmaz Döküm (AISI 304)	*Suction and Outlet: Stainless Cast Iron (AISI 304)*	+	+	+	+	+	+
Kademe ve Fan: Cam Elyaflı Polikarbonat	*Stage and Impeller: Fiber Glass Reinforced Polycarbonate*	+	+	+	+	+	+

Pompa Kodlaması / *Identification Code*

S4 P 4 3/27

Pompa Çapı	*Pump Diameter*
Model	*Model Code*
Nominal Debi	*Nominal Flow Rate*
Motor Gücü (HP)	*Motor Power (HP)*
Kademe Sayısı	*Stage Number*

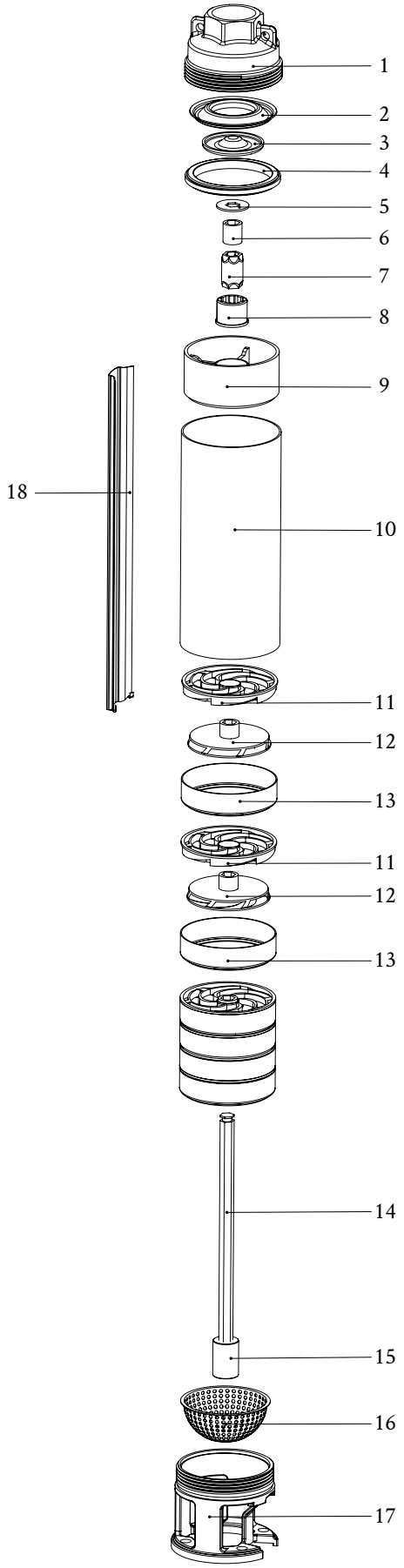

No	Parça Adı	Malzeme
1	Pompa Çıkışı	Paslanmaz Döküm (AISI 304)
2	Klepe Sacı	Paslanmaz Çelik (AISI 304)
3	Klepe Kapağı	Paslanmaz Çelik (AISI 304)
4	Klepe Lastiği	Kauçuk (NBR)
5	Ayar Sacı	Paslanmaz Çelik (AISI 304)
6	Üst Pul	Paslanmaz Çelik (AISI 304)
7	Mil Burcu	Paslanmaz Çelik (AISI 304)
8	Ara Manşon	Termoplastik Poliüretan (TPU)
9	Üst Merkezleme	Polikarbonat (PC)
10	Dış Kılıf Borusu	Paslanmaz Çelik (AISI 304)
11	Difüzör	Polikarbonat (PC)
12	Fan	Polikarbonat (PC)
13	Difüzör Kapağı	Polikarbonat (PC)
14	Mil	Paslanmaz Çelik (AISI 420)
15	Kaplin	Paslanmaz Çelik (AISI 420)
16	Filtre	Paslanmaz Çelik (AISI 304)
17	Emiş Adaptörü	Paslanmaz Döküm (AISI 304)
18	Kablo Koruyucu	Paslanmaz Çelik (AISI 304)

No	Components	Material
1	Outlet	Stainless Steel Casting (AISI 304)
2	Valve Cup	Stainless Steel (AISI 304)
3	Valve Support with Gasket	Stainless Steel (AISI 304)
4	Valve Bearing	Rubber (NBR)
5	Adjusting Ring	Stainless Steel (AISI 304)
6	Spacer Washer	Stainless Steel (AISI 304)
7	Shaft Sleeve	Stainless Steel (AISI 304)
8	Spacer Sleeve	Thermoplastic Polyurethane (TPU)
9	Upper Support	Polycarbonate (PC)
10	Outer Sleeve	Stainless Steel (AISI 304)
11	Diffuser	Polycarbonate (PC)
12	Impeller	Polycarbonate (PC)
13	Diffuser Cover	Polycarbonate (PC)
14	Shaft	Stainless Steel (AISI 420)
15	Coupling	Stainless Steel (AISI 420)
16	Strainer	Stainless Steel (AISI 304)
17	Suction	Stainless Steel Casting (AISI 304)
18	Cable Guard	Stainless Steel (AISI 304)

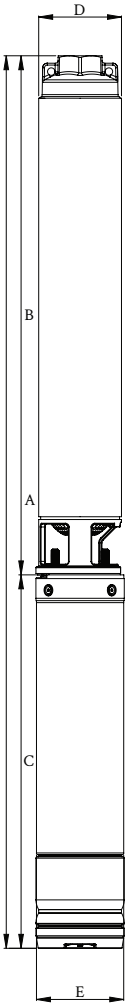

Pompa Tipi *Pump Type*	Motor				Ölçüler / *Dimensions (mm)*					Toplam Ağırlık *Total Weight (kg)*
	Tipi *Type*	Ø	HP	kW	Boy / *Length*			Çap / *Dia.*		
					A	B	C	D	E	
S4 P2 01/14	S095MC/01-M	4”	1	0,75	852	411	441	95	95	15
S4 P2 01/14	S095MC/01-T	4”	1	0,75	816	411	405	95	95	13
S4 P2 1,5/20	S095MC/1,5-M	4”	1,5	1,1	983	516	467	95	95	17
S4 P2 1,5/20	S095MC/1,5-T	4”	1,5	1,1	957	516	441	95	95	15
S4 P2 02/28	S095MC/02-M	4”	2	1,5	1152	657	495	95	95	19
S4 P2 02/28	S095MC/02-T	4”	2	1,5	1116	657	459	95	95	18
S4 P2 03/40	S095MC/03-M	4”	3	2,2	1503	905	598	95	95	27
S4 P2 03/40	S095MC/03-T	4”	3	2,2	1400	905	495	95	95	22
S4 P2 04/52	S095MC/04-T	4”	4	3	1741	1116	625	95	95	30
S4 P4 01/09	S095MC/01-M	4”	1	0,75	803	362	441	95	95	14
S4 P4 01/09	S095MC/01-T	4”	1	0,75	767	362	405	95	95	12
S4 P4 1,5/14	S095MC/1,5-M	4”	1,5	1,1	938	471	467	95	95	16
S4 P4 1,5/14	S095MC/1,5-T	4”	1,5	1,1	912	471	441	95	95	15
S4 P4 02/19	S095MC/02-M	4”	2	1,5	1075	580	495	95	95	18
S4 P4 02/19	S095MC/02-T	4”	2	1,5	1039	580	459	95	95	16
S4 P4 03/27	S095MC/03-M	4”	3	2,2	1388	790	598	95	95	25
S4 P4 03/27	S095MC/03-T	4”	3	2,2	1285	790	495	95	95	20
S4 P4 04/35	S095MC/04-T	4”	4	3	1589	964	625	95	95	28
S4 P4 05/48	S095MC/05-T	4”	5,5	4	1870	1245	625	95	95	32
S4 P6 01/07	S095MC/01-M	4”	1	0,75	835	394	441	95	95	14
S4 P6 01/07	S095MC/01-T	4”	1	0,75	799	394	405	95	95	13
S4 P6 1,5/10	S095MC/1,5-M	4”	1,5	1,1	954	487	467	95	95	16
S4 P6 1,5/10	S095MC/1,5-T	4”	1,5	1,1	928	487	441	95	95	15
S4 P6 02/14	S095MC/02-M	4”	2	1,5	1106	611	495	95	95	18
S4 P6 02/14	S095MC/02-T	4”	2	1,5	1070	611	459	95	95	16
S4 P6 03/21	S095MC/03-M	4”	3	2,2	1463	865	598	95	95	25
S4 P6 03/21	S095MC/03-T	4”	3	2,2	1360	865	495	95	95	20
S4 P6 04/29	S095MC/04-T	4”	4	3	1738	1113	625	95	95	28
S4 P6 05/38	S095MC/05-T	4”	5,5	4	2017	1392	625	95	95	32
S4 P6 07/52	S095MC/07-T	4”	7,5	5,5	2586	1863	723	95	95	40

Pompa Tipi *Pump Type*	Motor				Ölçüler / *Dimensions (mm)*					Toplam Ağırlık *Total Weight (kg)*
	Tipi *Type*	Ø	HP	kW	Boy / *Length*			Çap / *Dia.*		
					A	B	C	D	E	
S4 P8 01/04	S095MC/01-M	4”	1	0,75	742	301	441	95	95	13
S4 P8 01/04	S095MC/01-T	4”	1	0,75	706	301	405	95	95	12
S4 P8 1,5/06	S095MC/1,5-M	4”	1,5	1,1	830	363	467	95	95	15
S4 P8 1,5/06	S095MC/1,5-T	4”	1,5	1,1	804	363	441	95	95	14
S4 P8 02/08	S095MC/02-M	4”	2	1,5	920	425	495	95	95	17
S4 P8 02/08	S095MC/02-T	4”	2	1,5	884	425	459	95	95	15
S4 P8 03/13	S095MC/03-M	4”	3	2,2	1178	580	598	95	95	23
S4 P8 03/13	S095MC/03-T	4”	3	2,2	1075	580	495	95	95	18
S4 P8 04/17	S095MC/04-T	4”	4	3	1329	704	625	95	95	25
S4 P8 05/23	S095MC/05-T	4”	5,5	4	1552	927	625	95	95	28
S4 P8 07/32	S095MC/07-T	4”	7,5	5,5	1929	1206	723	95	95	35
S4 P8 10/43	S095MC/10-T	4”	10	7,5	2344	1584	760	95	95	41
S4 P12 1,5/05	S095MC/1,5-M	4”	1,5	1,1	904	437	467	95	95	15
S4 P12 1,5/05	S095MC/1,5-T	4”	1,5	1,1	878	437	441	95	95	14
S4 P12 02/08	S095MC/02-M	4”	2	1,5	1088	593	495	95	95	18
S4 P12 02/08	S095MC/02-T	4”	2	1,5	1052	593	459	95	95	16
S4 P12 03/11	S095MC/03-M	4”	3	2,2	1347	749	598	95	95	24
S4 P12 03/11	S095MC/03-T	4”	3	2,2	1244	749	495	95	95	19
S4 P12 04/15	S095MC/04-T	4”	4	3	1619	994	625	95	95	27
S4 P12 05/20	S095MC/05-T	4”	5,5	4	1879	1254	625	95	95	31
S4 P12 07/27	S095MC/07-T	4”	7,5	5,5	2378	1655	723	95	95	39
S4 P12 10/36	S095MC/10-T	4”	10	7,5	2883	2123	760	95	95	45
S4 P18 02/05	S095MC/02-M	4”	2	1,5	1012	517	495	95	95	17
S4 P18 02/05	S095MC/02-T	4”	2	1,5	976	517	459	95	95	15
S4 P18 03/08	S095MC/03-M	4”	3	2,2	1319	721	598	95	95	24
S4 P18 03/08	S095MC/03-T	4”	3	2,2	1216	721	495	95	95	19
S4 P18 04/11	S095MC/04-T	4”	4	3	1587	962	625	95	95	27
S4 P18 05/15	S095MC/05-T	4”	5,5	4	1859	1234	625	95	95	31
S4 P18 07/20	S095MC/07-T	4”	7,5	5,5	2334	1611	723	95	95	38
S4 P18 10/28	S095MC/10-T	4”	10	7,5	2915	2155	760	95	95	45

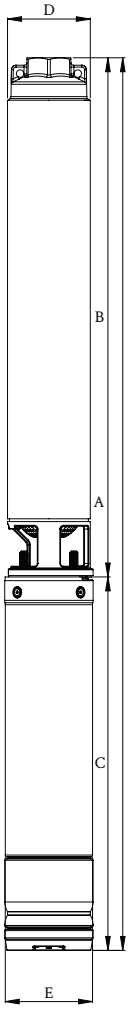

Pompa Tipi *Pump Type*	Motor			Kademe Sayısı *Stage No.*	Pompa Çıkışı *Pump Outlet*	Ø max *(mm)*	Basma Yüksekliği / *Head (m)*					
	Ø	HP	kW				0 *(l/s)*	0,3	0,4	0,5	0,7	0,8
							0 *(m³/h)*	1,2	1,5	1,8	2,4	3,0
S4 P2 01/14	4"	1	0,75	14	1 1/4"	95	93	83	79	73	57	37
S4 P2 1,5/20	4"	1,5	1,1	20	1 1/4"	95	133	119	113	104	82	53
S4 P2 02/28	4"	2	1,5	28	1 1/4"	95	187	167	158	146	115	74
S4 P2 03/40	4"	3	2,2	40	1 1/4"	95	267	238	226	208	164	106
S4 P2 04/52	4"	4	3	52	1 1/4"	95	347	309	294	271	213	138

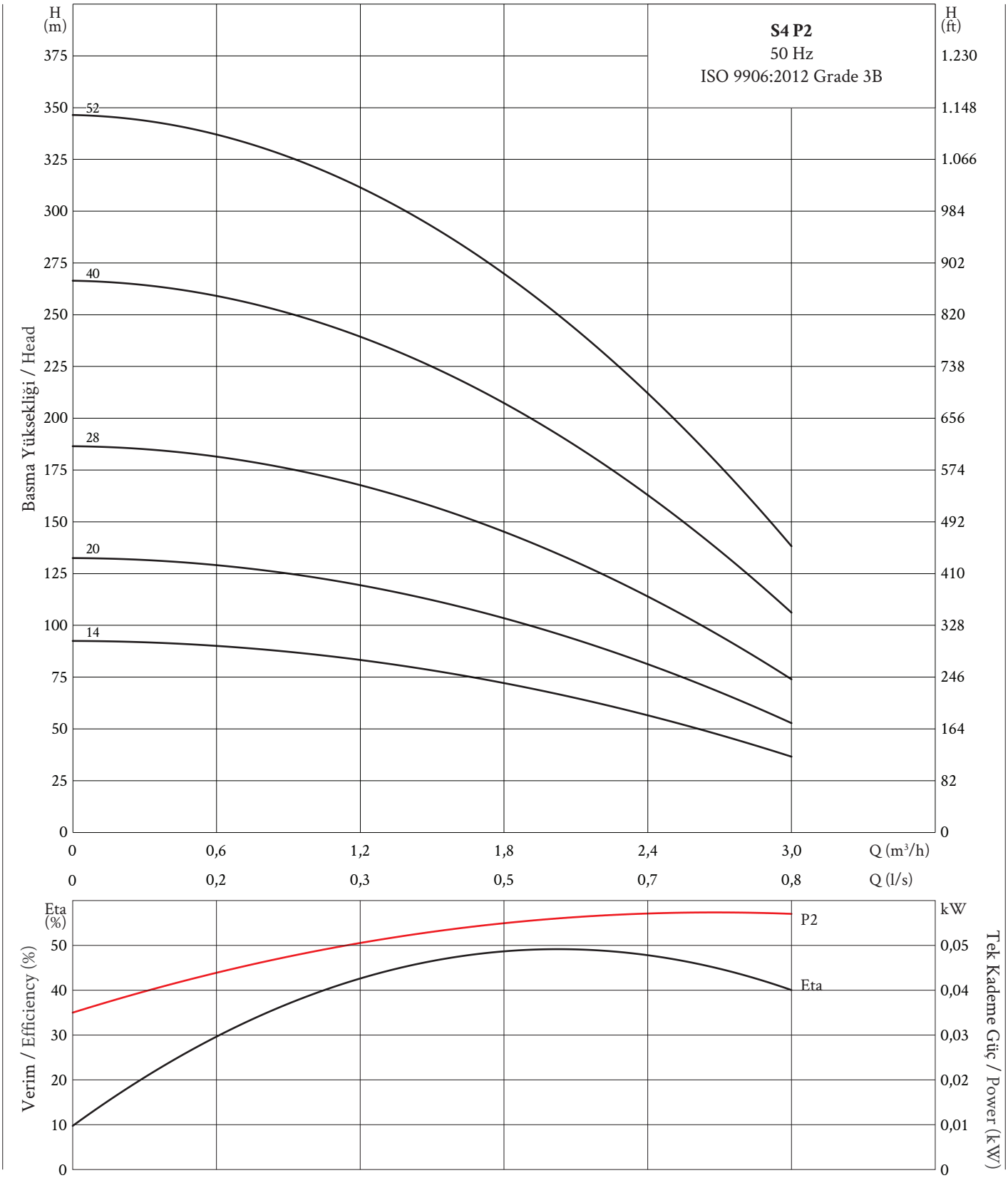

Pompa Tipi *Pump Type*	Motor			Kademe Sayısı *Stage No.*	Pompa Çıkışı *Pump Outlet*	Ø max *(mm)*	Basma Yüksekliği / *Head (m)*						
	Ø	HP	kW				0 *(l/s)*	0,5	0,7	0,8	1,0	1,3	1,5
							0 *(m³/h)*	1,8	2,4	3,0	3,6	4,8	5,4
S4 P4 01/09	4"	1	0,75	9	1 1/4"	95	60	54	50	47	42	28	19
S4 P4 1,5/14	4"	1,5	1,1	14	1 1/4"	95	94	84	80	74	66	44	30
S4 P4 02/19	4"	2	1,5	19	1 1/4"	95	127	114	108	100	89	60	40
S4 P4 03/27	4"	3	2,2	27	1 1/4"	95	181	162	154	142	127	85	57
S4 P4 04/35	4"	4	3	35	1 1/4"	95	228	204	194	179	160	107	72
S4 P4 05/48	4"	5,5	4	48	1 1/4"	95	322	288	274	252	226	151	102

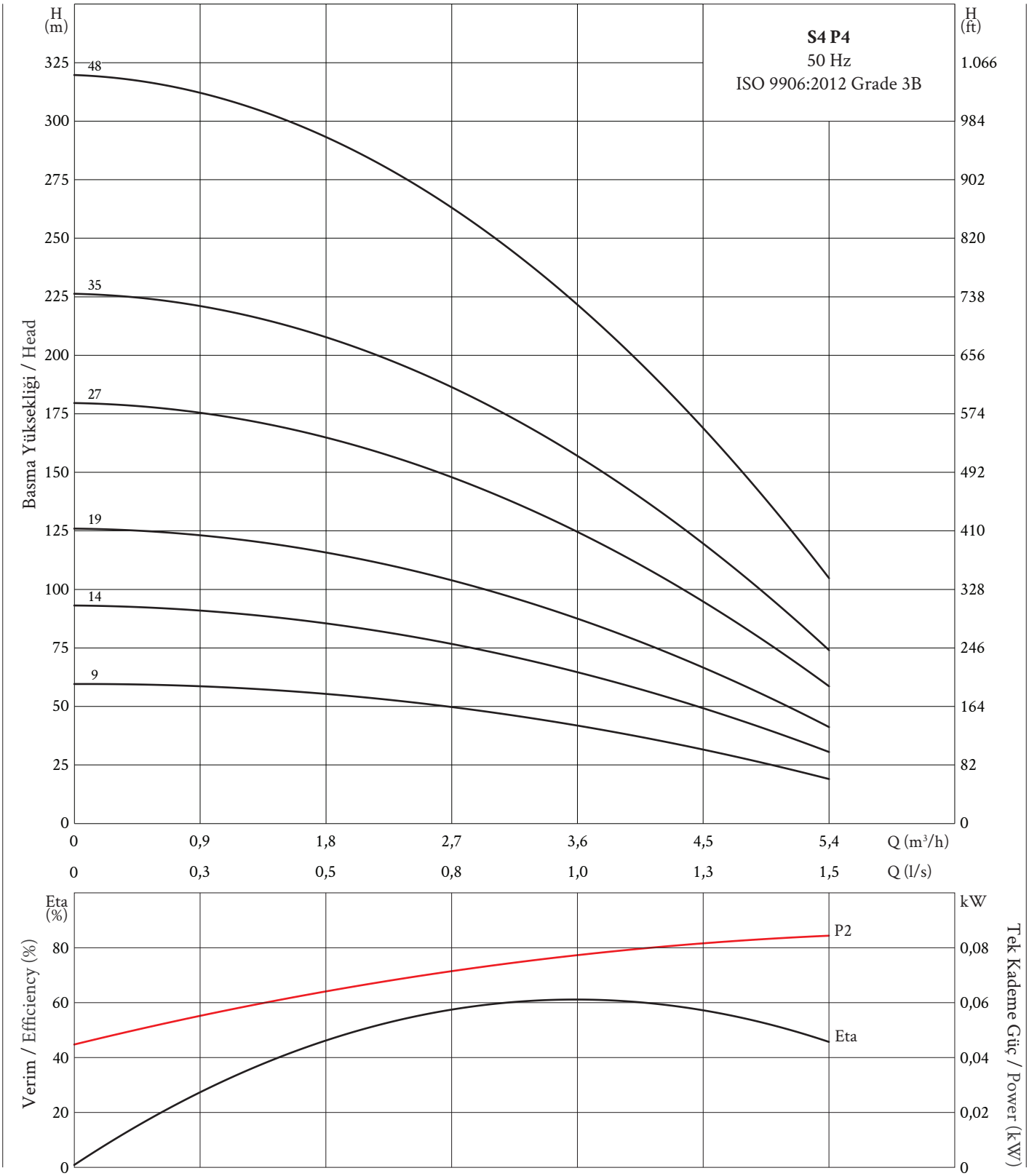

Pompa Tipi *Pump Type*	Motor			Kademe Sayısı *Stage No.*	Pompa Çıkışı *Pump Outlet*	Ø max *(mm)*	Basma Yüksekliği / *Head (m)*						
	Ø	HP	kW				0 *(l/s)*	1,0	1,3	1,5	1,8	2,0	2,3
							0 *(m³/h)*	3,6	4,5	5,4	6,3	7,2	8,1
S4 P6 01/07	4”	1	0,75	7	2”	95	43	35	32	28	24	20	15
S4 P6 1,5/10	4”	1,5	1,1	10	2”	95	61	49	46	41	35	30	22
S4 P6 02/14	4”	2	1,5	14	2”	95	85	69	64	57	50	41	31
S4 P6 03/21	4”	3	2,2	21	2”	95	128	104	97	87	76	61	47
S4 P6 04/29	4”	4	3	29	2”	95	177	143	132	119	105	85	66
S4 P6 05/38	4”	5,5	4	38	2”	95	212	188	172	156	136	112	86
S4 P6 07/52	4”	7,5	5,5	52	2”	95	317	257	235	213	185	152	118

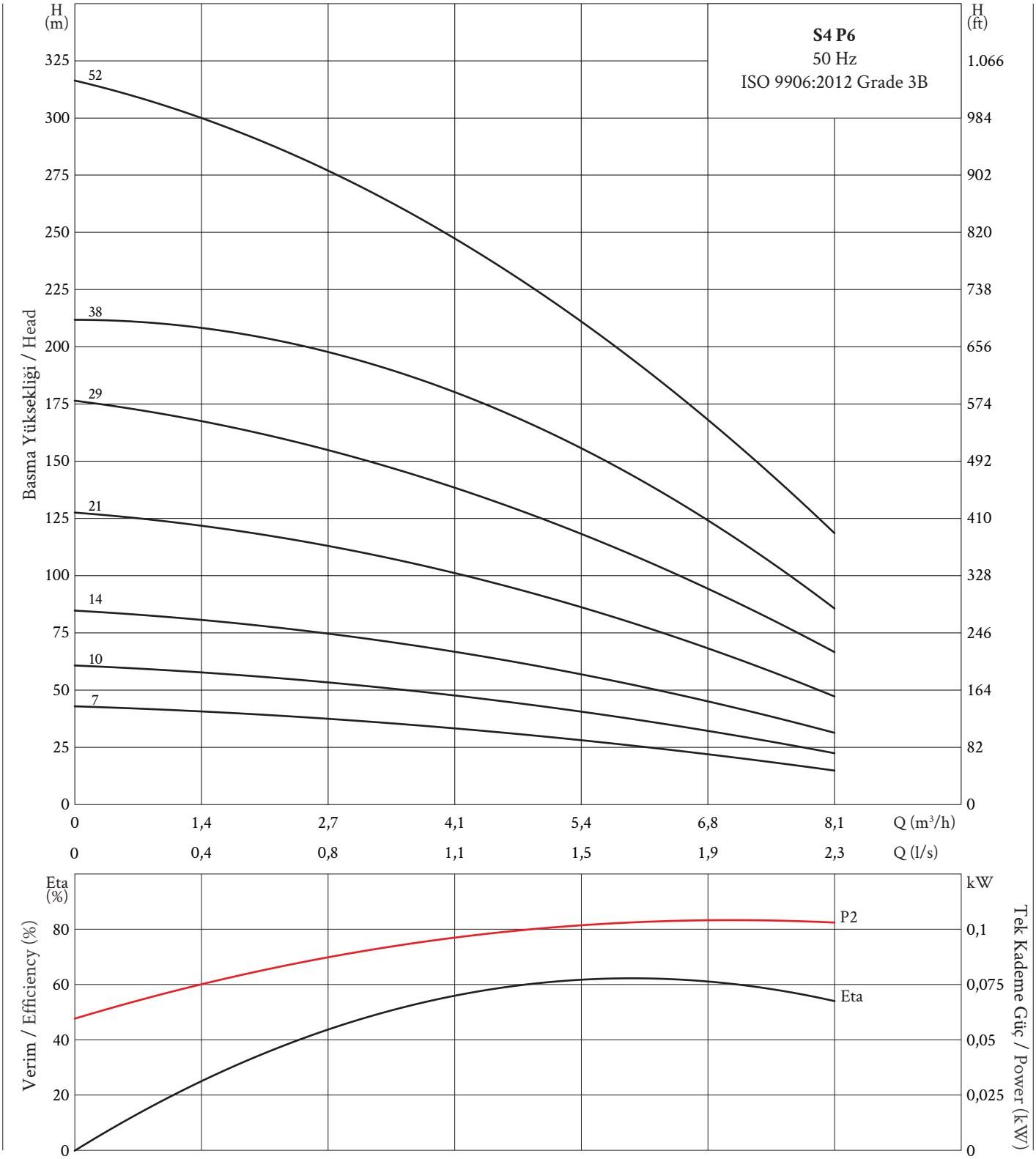

Pompa Tipi *Pump Type*	Motor			Kademe Sayısı *Stage No.*	Pompa Çıkışı *Pump Outlet*	Ø max *(mm)*	Basma Yüksekliği / *Head (m)*						
	Ø	HP	kW				0 *(l/s)*	1,0	1,3	1,7	2,0	2,3	2,7
							0 *(m³/h)*	3,6	4,8	6,0	7,2	8,4	9,6
S4 P8 01/04	4”	1	0,75	4	2”	95	26	23	22	21	20	18	15
S4 P8 1,5/06	4”	1,5	1,1	6	2”	95	39	35	34	32	29	27	22
S4 P8 02/08	4”	2	1,5	8	2”	95	52	47	45	43	39	35	30
S4 P8 03/13	4”	3	2,2	13	2”	95	85	76	73	69	64	57	49
S4 P8 04/17	4”	4	3	17	2”	95	111	100	95	90	83	75	64
S4 P8 05/23	4”	5,5	4	23	2”	95	150	135	129	122	113	102	86
S4 P8 07/32	4”	7,5	5,5	32	2”	95	208	187	179	170	157	141	120
S4 P8 10/43	4”	10	7,5	43	2”	95	280	252	241	228	211	190	161

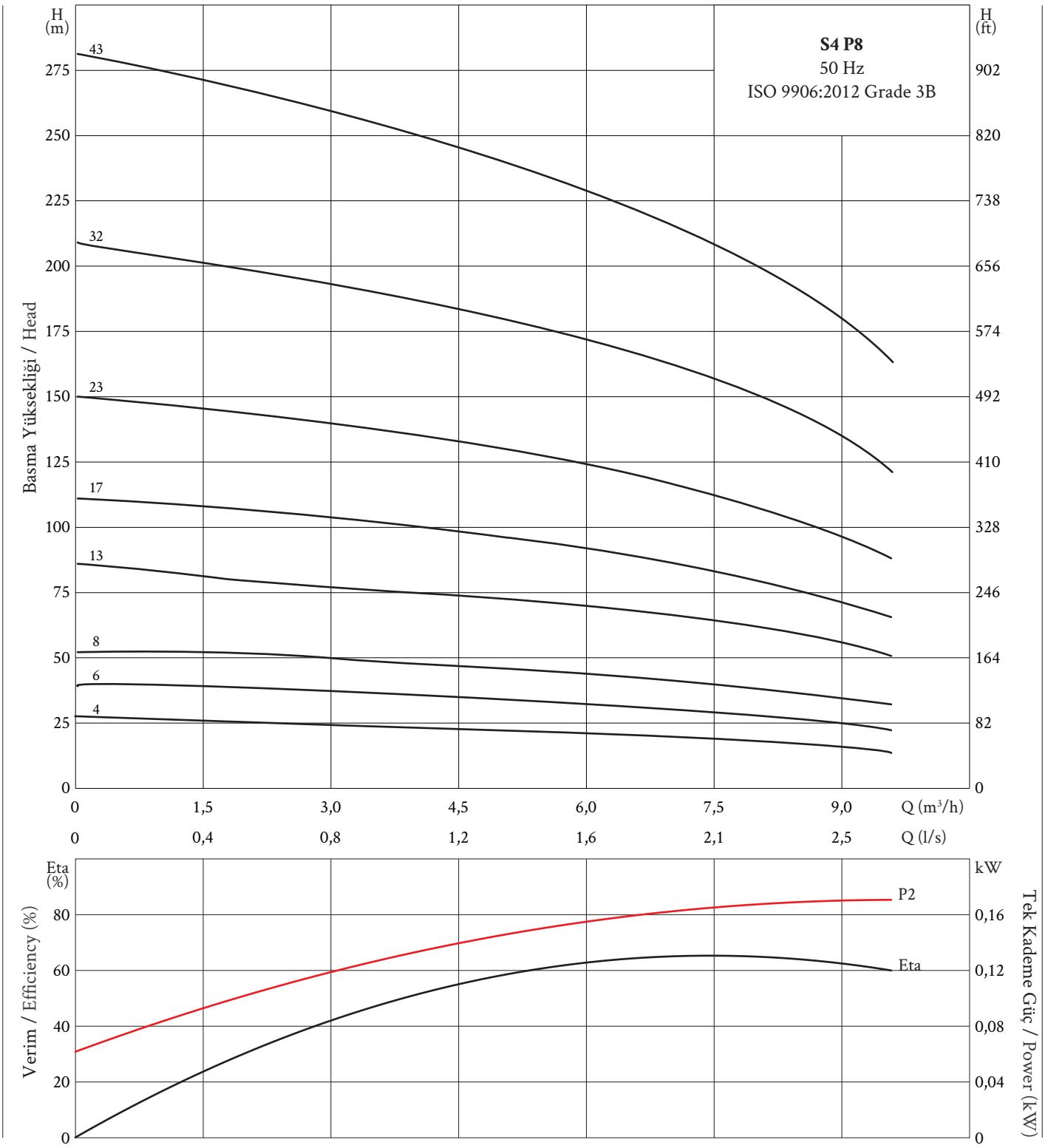

Pompa Tipi *Pump Type*	Motor			Kademe Sayısı *Stage No.*	Pompa Çıkışı *Pump Outlet*	Ø max *(mm)*	Basma Yüksekliği / *Head (m)*						
	Ø	HP	kW				0 *(l/s)*	1,7	2,0	2,3	2,7	3,3	4,2
							0 *(m³/h)*	6,2	7,2	8,4	9,6	12,0	15,0
S4 P12 1,5/05	4”	1,5	1,1	5	2”	95	31	26	25	24	21	18	12
S4 P12 02/08	4”	2	1,5	8	2”	95	49	42	40	38	34	29	19
S4 P12 03/11	4”	3	2,2	11	2”	95	67	58	55	52	47	40	26
S4 P12 04/15	4”	4	3	15	2”	95	92	79	75	71	65	54	36
S4 P12 05/20	4”	5,5	4	20	2”	95	122	105	100	94	87	72	48
S4 P12 07/27	4”	7,5	5,5	27	2”	95	165	142	135	127	117	98	65
S4 P12 10/36	4”	10	7,5	36	2”	95	221	189	180	169	156	130	87

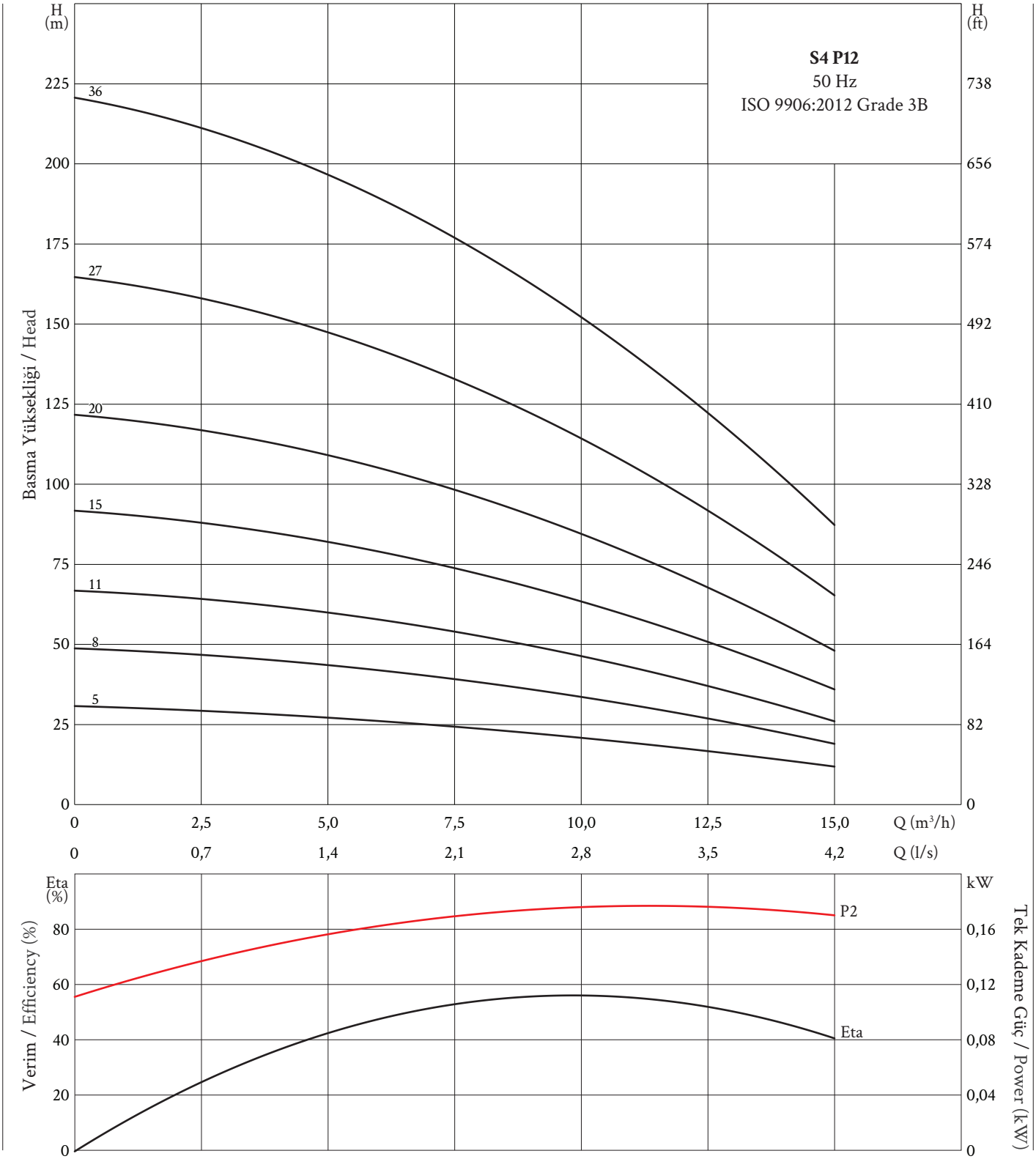

Pompa Tipi *Pump Type*	Motor			Kademe Sayısı *Stage No.*	Pompa Çıkışı *Pump Outlet*	Ø max *(mm)*	Basma Yüksekliği / *Head (m)*						
	Ø	HP	kW				0 *(l/s)*	2,3	2,7	3,3	4,2	5,0	6,1
							0 *(m³/h)*	8,4	9,6	12,0	15,0	18,0	22,0
S4 P18 02/05	4”	2	1,5	5	2”	95	29	23	22	20	17	14	10
S4 P18 03/08	4”	3	2,2	8	2”	95	47	37	36	32	27	23	16
S4 P18 04/11	4”	4	3	11	2”	95	65	51	49	44	38	31	22
S4 P18 05/15	4”	5,5	4	15	2”	95	89	70	67	60	51	43	30
S4 P18 07/20	4”	7,5	5,5	20	2”	95	118	97	89	80	69	57	41
S4 P18 10/28	4”	10	7,5	28	2”	95	165	131	125	112	96	80	57

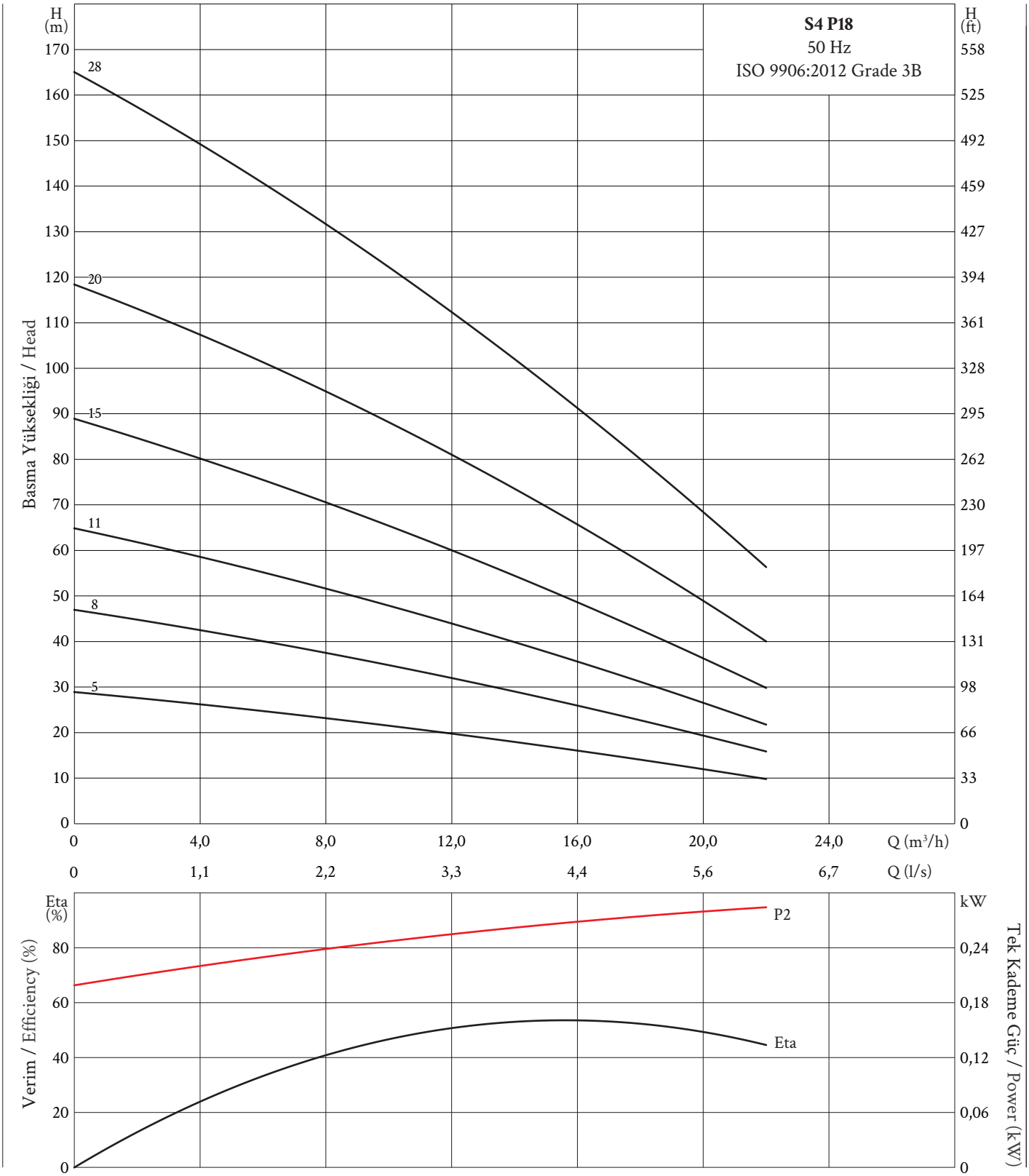

ÜSTÜNEL
Dalgıç Pompa-Submersible Pump

NORİL DALGIÇ POMPA

NORYL SUBMERSIBLE PUMPS

Kullanım Yerleri

Su Temini
Sulama Sistemleri
Zemin Suyu Alçaltma
Basınçlandırma
Endüstriyel Uygulamalar
Temiz, içinde lif ve katı maddeler bulunmayan, agresif sıvıların pompalanması

Applications

Raw Water Supply
Irrigation Systems
Groundwater lowering
Pressure Boosting
Industrial Applications
Pumping of clean, thin and non-aggressive liquids without fibres or solid particules

Çalışma Koşulları

Maksimum Sıvı Sıcaklığı	30°C
Maksimum Kum Miktarı	40 gr/m³
Motor Koruma Sınıfı	IP68
Maksimum Çalışma Sesi	70dB
Maksimum Kalkış Sayısı	20 (kalkış/saat)
Motor Dönüş Yönü	İki Yönlü

*Pompalar min. 6" sondaj (150 mm) kuyu içinde çalışabilmektedir.

*Deniz suyu uygulamalarında katadik koruma önerilmektedir.

Operating Conditions

Max. Liquid Temperature	*30°C*
Max. Sand Content	*40 gr/m³*
Motor Protection Class	*IP68*
Max. Operation Sound	*70dB*
Max. Starting Number	*20 (start/hour)*
Motor Rotation Direction	*Bidirectional*

**Pumps can work in min 6" drilling well (150 mm).*

**Cathodical protection is suggested for seawater applications.*

Pompa Çeşitleri / *Pump Range*

Tipi	Type	S6L	S6M	S6H	S6P
Çıkış Bağlantısı	*Outlet Connection*	2,5-3"	2,5-3"	3"	3"
Mil Çapı (mm)	*Shaft Diameter (mm)*	17	17	17	17
Su Verebilme Kapasitesi (m³/h)	*Water Capacity (m³/h)*	3,6-15,6	3,6-21,6	7,2-43,2	18-61,2
Emiş ve Çıkış: Döküm (EN-GJL-250)	*Suction and Outlet: Cast Iron (EN-GJL-250)*	+	+	+	+
Kademe ve Fan: Noril	*Stage and impeller: Noryl*	+	+	+	+

Pompa Kodlaması / *Identification Code*

S6 M 10/12

Pompa Çapı	*Pump Diameter*
Model	*Model Code*
Motor Gücü (HP)	*Motor Power (HP)*
Kademe Sayısı	*Stage Number*

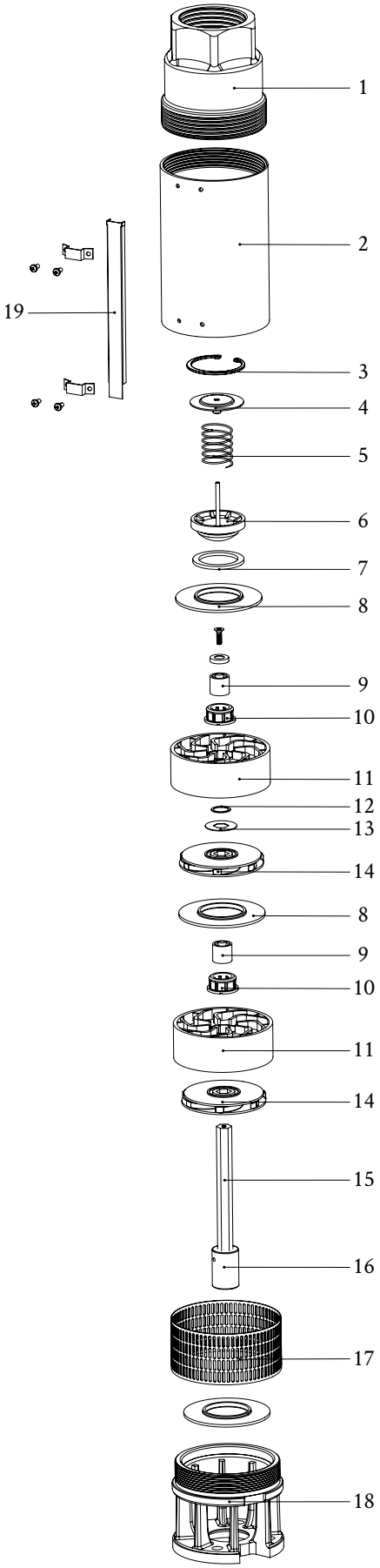

No	Parça Adı	Malzeme
1	Pompa Çıkışı	Döküm (EN-GJL-250)
2	Dış Kılıf Borusu	Paslanmaz Çelik (AISI 304)
3	Segman	Çelik
4	Klepe Sacı	Paslanmaz Çelik (AISI 304)
5	Klepe Yayı	Paslanmaz Çelik (AISI 304)
6	Klepe	Paslanmaz Çelik (AISI 304)
7	Klepe Lastiği	Kauçuk (NBR)
8	Kademe Kapağı	Noril
9	Kademe Merkezleme Burcu	Paslanmaz Çelik (AISI 304)
10	Kademe Lastiği	Kauçuk (NBR)
11	Kademe	Noril
12	Ayar Sacı	Paslanmaz Çelik (AISI 304)
13	Altı Köşe Sac	Paslanmaz Çelik (AISI 304)
14	Fan	Noril
15	Mil	Paslanmaz Çelik (AISI 304)
16	Kaplin	Paslanmaz Çelik (AISI 420)
17	Filtre	Paslanmaz Çelik (AISI 304)
18	Emiş Adaptörü	Döküm (EN-GJL-250)
19	Kablo Koruyucu	Paslanmaz Çelik (AISI 304)

No	Components	Material
1	Outlet	Cast Iron (EN-GJL-250)
2	Outer Sleeve	Stainless Steel (AISI 304)
3	Ring	Steel
4	Valve Cup	Stainless Steel (AISI 304)
5	Valve Spring	Stainless Steel (AISI 304)
6	Valve	Stainless Steel (AISI 304)
7	Valve Bearing	Rubber (NBR)
8	Stage Cover	Noryl
9	Stage Support Bearing	Stainless Steel (AISI 304)
10	Stage Bearing	Rubber (NBR)
11	Stage	Noryl
12	Adjusting Ring	Stainless Steel (AISI 304)
13	Hexagon Sheet Metal	Stainless Steel (AISI 304)
14	Impeller	Noryl
15	Shaft	Stainless Steel (AISI 304)
16	Coupling	Stainless Steel (AISI 420)
17	Strainer	Stainless Steel (AISI 304)
18	Suction	Cast Iron (EN-GJL-250)
19	Cable Guard	Stainless Steel (AISI 304)

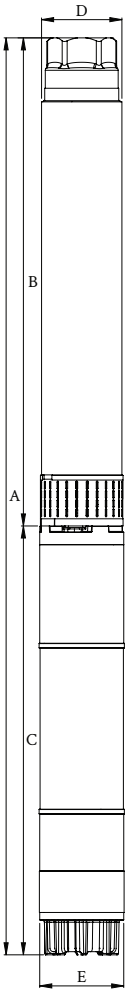

Pompa Tipi *Pump Type*	Motor				Ölçüler / *Dimensions (mm)*					Toplam Ağırlık *Total Weight (kg)*
	Tipi *Type*	Ø	HP	kW	Boy / *Length*			Çap / *Dia*		
					A	B	C	D	E	
S6 L 05/08	S095MC/05-T	4”	5,5	4	1305	680	625	150	95	38
S6 L 05/08	S145MC/05	6”	5,5	4	1305	680	625	150	145	64
S6 L 07/11	S095MC/07-T	4”	7,5	5,5	1543	820	723	150	95	45
S6 L 07/11	S145MC/07	6”	7,5	5,5	1445	820	625	150	145	67
S6 L 10/15	S145MC/10	6”	10	7,5	1690	1030	660	150	145	76
S6 L 12/17	S145MC/12	6”	12,5	9	1835	1130	705	150	145	82
S6 L 15/23	S145MC/15	6”	15	11	2240	1490	750	150	145	98
S6 L 20/28	S145MC/20	6”	20	15	2650	1800	850	150	145	116
S6 L 25/33	S145MC/25	6”	25	18,5	2980	2050	930	150	145	130
S6 L 30/38	S145MC/30	6”	30	22	3310	2300	1010	150	145	144
S6 L 35/42	S145MC/35	6”	35	26	3550	2500	1050	150	145	152
S6 M 03/04	S095MC/03-T	4”	3	2,2	875	380	495	150	95	27
S6 M 04/05	S095MC/04-T	4”	4	3	1030	475	555	150	95	32
S6 M 05/06	S095MC/05-T	4”	5,5	4	1195	570	625	150	95	36
S6 M 05/06	S145MC/05	6”	5,5	4	1195	570	625	150	145	62
S6 M 07/09	S095MC/07-T	4”	7,5	5,5	1453	730	723	150	95	43
S6 M 07/09	S145MC/07	6”	7,5	5,5	1355	730	625	150	145	65
S6 M 10/12	S145MC/10	6”	10	7,5	1540	880	660	150	145	72
S6 M 12/16	S145MC/12	6”	12,5	9	1785	1080	705	150	145	81
S6 M 15/18	S145MC/15	6”	15	11	1940	1190	750	150	145	89
S6 M 20/24	S145MC/20	6”	20	15	2390	1540	850	150	145	110
S6 M 25/27	S145MC/25	6”	25	18,5	2680	1750	930	150	145	124
S6 M 30/30	S145MC/30	6”	30	22	2910	1900	1010	150	145	136
S6 M 35/35	S145MC/35	6”	35	26	3200	2150	1050	150	145	145

Pompa Tipi *Pump Type*	Motor				Ölçüler / *Dimensions (mm)*					Toplam Ağırlık *Total Weight (kg)*
	Tipi *Type*	Ø	HP	kW	Boy / *Length*			Çap / *Dia*		
					A	B	C	D	E	
S6 H 05/03	S095MC/05-T	4”	5,5	4	1135	510	625	150	95	34
S6 H 05/03	S145MC/05	6”	5,5	4	1135	510	625	150	145	60
S6 H 07/05	S095MC/07-T	4”	7,5	5,5	1383	660	723	150	95	41
S6 H 07/05	S145MC/07	6”	7,5	5,5	1285	660	625	150	145	64
S6 H 10/06	S145MC/10	6”	10	7,5	1400	740	660	150	145	69
S6 H 12/07	S145MC/12	6”	12,5	9	1525	820	705	150	145	75
S6 H 15/09	S145MC/15	6”	15	11	1720	970	750	150	145	85
S6 H 20/12	S145MC/20	6”	20	15	2050	1200	850	150	145	100
S6 H 25/16	S145MC/25	6”	25	18,5	2510	1580	930	150	145	117
S6 H 30/18	S145MC/30	6”	30	22	2740	1730	1010	150	145	130
S6 H 35/21	S145MC/35	6”	35	26	3080	2030	1050	150	145	142
S6 H 40/25	S145MC/40	6”	40	30	3420	2320	1100	150	145	153
S6 H 50/28	S145MC/50	6”	50	37	3720	2540	1180	150	145	163
S6 P 07/02	S095MC/07-T	4”	7,5	5,5	1203	480	723	150	95	40
S6 P 07/02	S145MC/07	6”	7,5	5,5	1105	480	625	150	145	62
S6 P 10/03	S145MC/10	6”	10	7,5	1250	590	660	150	145	67
S6 P 12/04	S145MC/12	6”	12,5	9	1405	700	705	150	145	74
S6 P 15/05	S145MC/15	6”	15	11	1560	810	750	150	145	81
S6 P 20/06	S145MC/20	6”	20	15	1770	920	850	150	145	94
S6 P 20/07	S145MC/25	6”	20	15	1960	1030	930	150	145	104

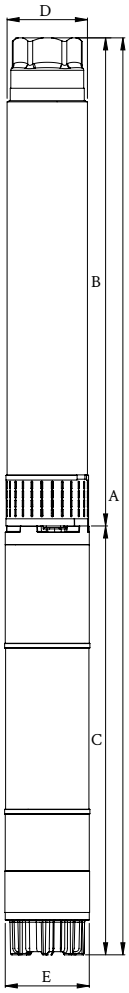

Pompa Tipi *Pump Type*	Motor			Kademe Sayısı *Stage No.*	Pompa Çıkışı *Pump Outlet*	Ø max *(mm)*	Basma Yüksekliği / *Head (m)*					
	Ø	HP	kW				0 *(l/s)*	1,0	2,0	3,0	4,0	4,5
							0 *(m³/h)*	3,6	7,2	10,8	14,4	16,2
S6 L 05/08	6”	5,5	4	8	2,5”-3”	150	110	104	90	70	42	30
S6 L 07/11	6”	7,5	5,5	11	2,5”-3”	150	144	142	124	96	60	41
S6 L 10/15	6”	10	7,5	15	2,5”-3”	150	180	176	158	128	80	60
S6 L 12/17	6”	12,5	9	17	2,5”-3”	150	212	200	184	152	96	73
S6 L 15/23	6”	15	11	23	2,5”-3”	150	288	280	246	192	134	102
S6 L 20/28	6”	20	15	28	2,5”-3”	150	356	342	306	256	196	168
S6 L 25/33	6”	25	18,5	33	2,5”-3”	150	400	392	352	290	216	184
S6 L 30/38	6”	30	22	38	2,5”-3”	150	449	432	492	332	258	223
S6 L 35/42	6”	35	26	42	2,5”-3”	150	480	466	424	360	280	240

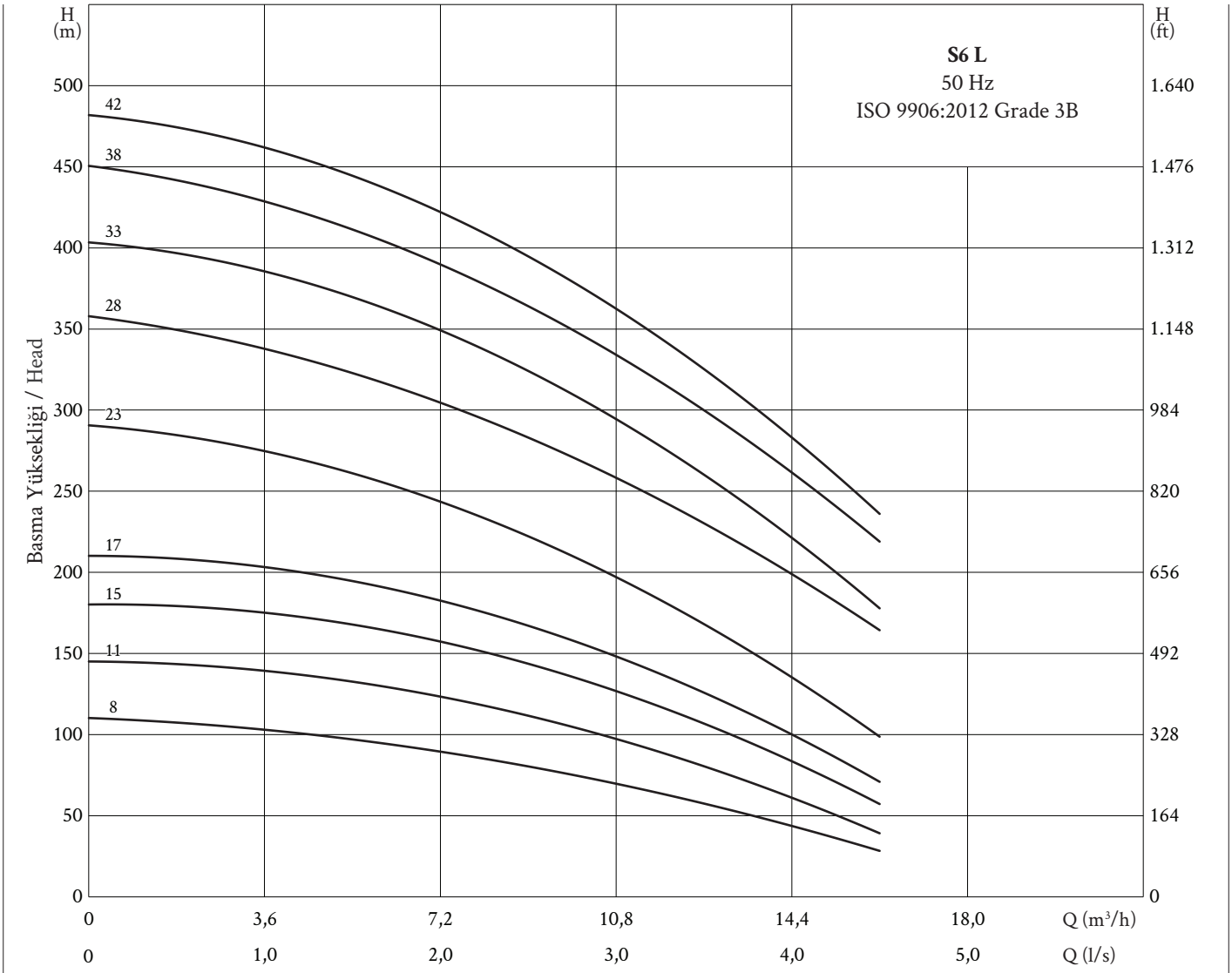

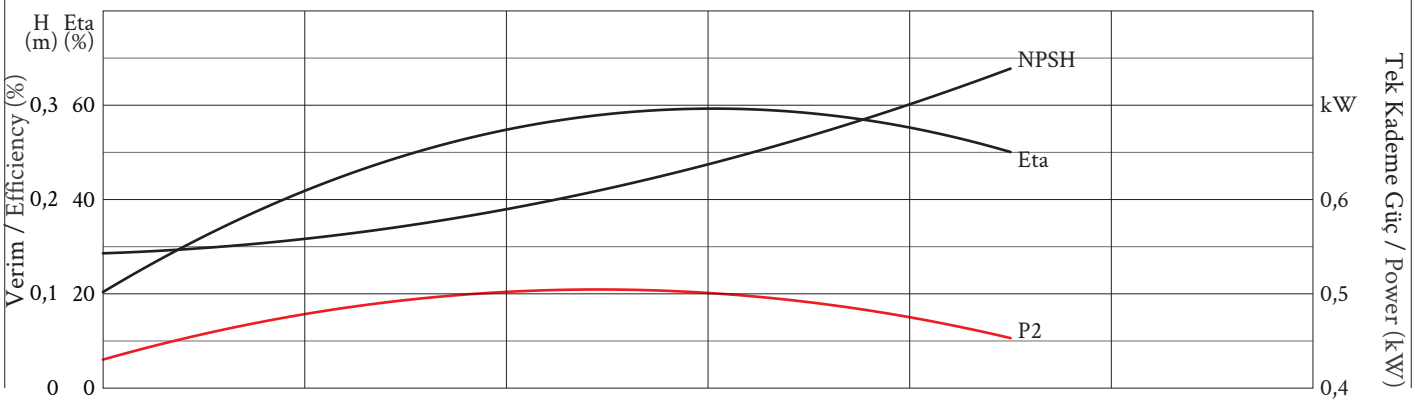

Pompa Tipi *Pump Type*	Motor			Kademe Sayısı *Stage No.*	Pompa Çıkışı *Pump Outlet*	Ø max *(mm)*	Basma Yüksekliği / *Head (m)*						
	Ø	HP	kW				0 *(l/s)*	1,0	2,0	3,0	4,0	5,0	6,0
							0 *(m³/h)*	3,6	7,2	10,8	14,4	18,0	21,6
S6 M 03/04	6”	3	2,2	4	2,5”-3”	150	50	47	46	43	38	36	30
S6 M 04/05	6”	4	3	5	2,5”-3”	150	62	60	59	54	48	42	33
S6 M 05/06	6”	5,5	4	6	2,5”-3”	150	74	71	70	64	56	48	36
S6 M 07/09	6”	7,5	5,5	9	2,5”-3”	150	111	109	104	95	80	64	46
S6 M 10/12	6”	10	7,5	12	2,5”-3”	150	138	136	130	120	103	88	64
S6 M 12/16	6”	12,5	9	16	2,5”-3”	150	182	178	176	160	141	114	80
S6 M 15/18	6”	15	11	18	2,5”-3”	150	212	210	200	184	158	128	94
S6 M 20/24	6”	20	15	24	2,5”-3”	150	269	264	252	240	208	172	122
S6 M 25/27	6”	25	18,5	27	2,5”-3”	150	310	307	296	268	244	202	144
S6 M 30/30	6”	30	22	30	2,5”-3”	150	355	351	336	320	280	234	174
S6 M 35/35	6”	35	26	35	2,5”-3”	150	460	432	414	370	324	272	204

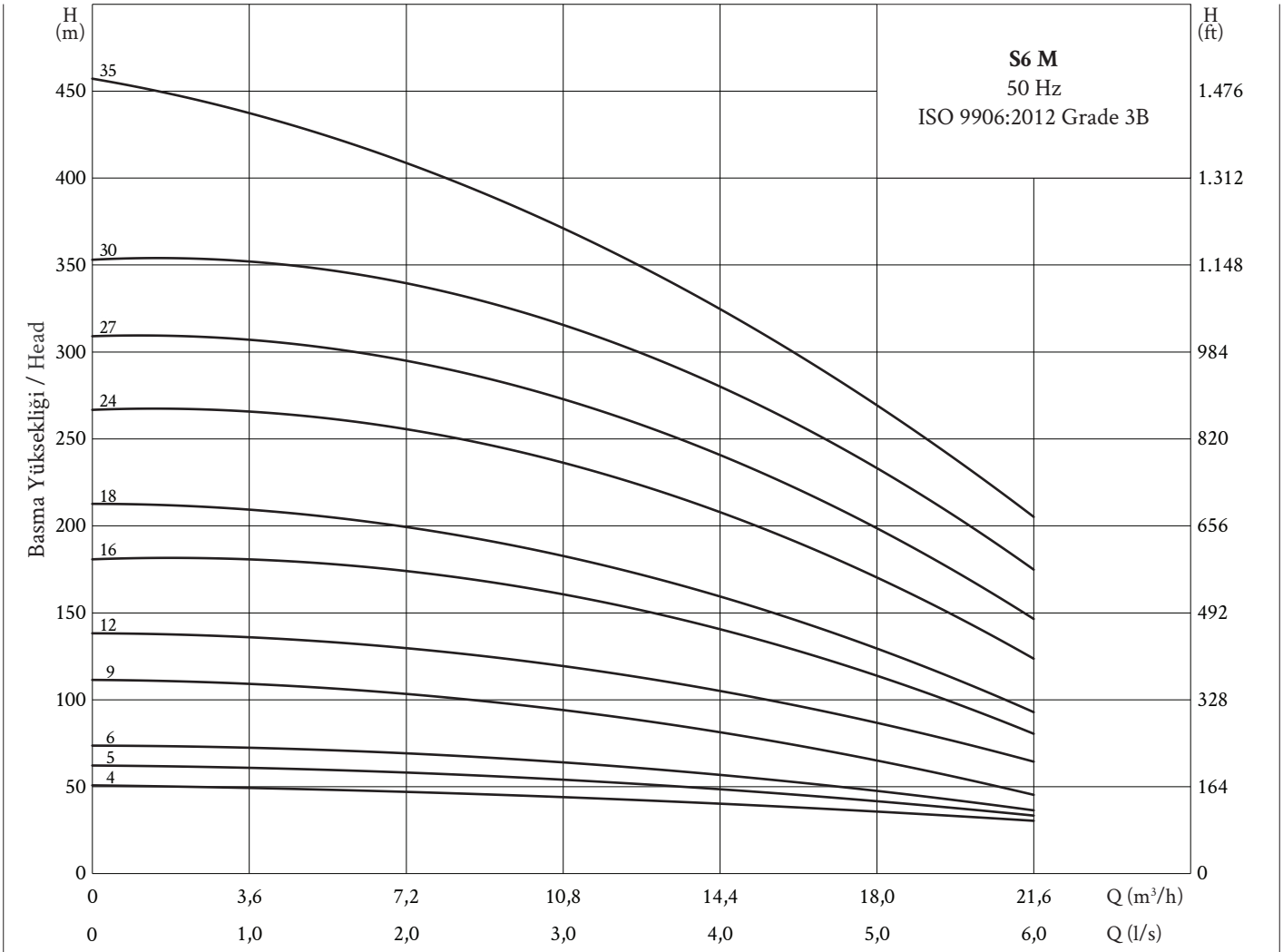

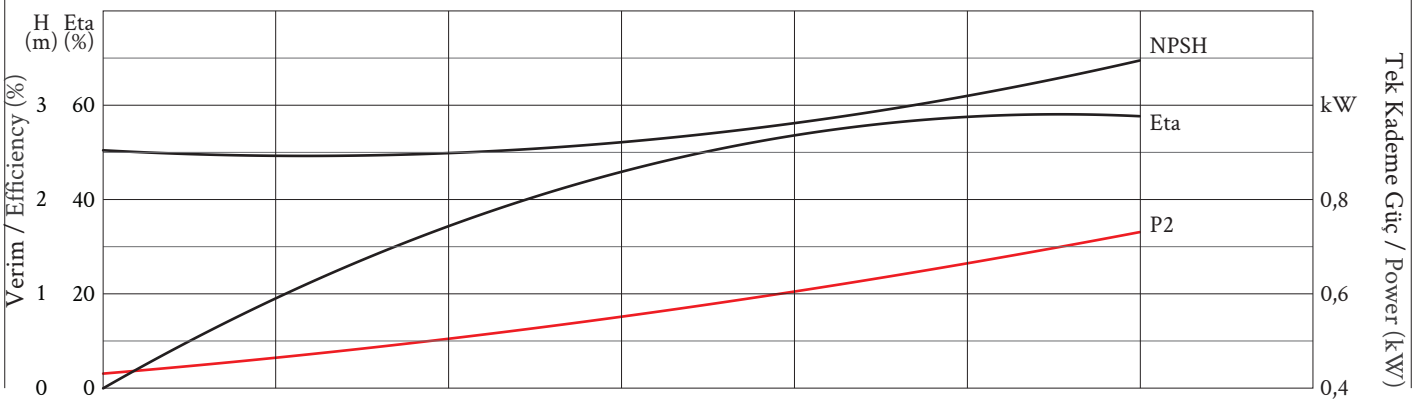

Pompa Tipi *Pump Type*	Motor			Kademe Sayısı *Stage No.*	Pompa Çıkışı *Pump Outlet*	Ø max *(mm)*	Basma Yüksekliği / *Head (m)*						
	Ø	HP	kW				0 *(l/s)*	2,0	4,0	6,0	8,0	10,0	12,0
							0 *(m³/h)*	7,2	14,4	21,6	28,8	36,0	43,2
S6 H 05/03	6”	5,5	4	3	3”	150	47	46	45	41	34	24	16
S6 H 07/05	6”	7,5	5,5	5	3”	150	75	74	72	67	54	37	28
S6 H 10/06	6”	10	7,5	6	3”	150	91	90	84	76	62	46	36
S6 H 12/07	6”	12,5	9	7	3”	150	108	106	98	88	72	56	45
S6 H 15/09	6”	15	11	9	3”	150	136	131	129	106	87	66	52
S6 H 20/12	6”	20	15	12	3”	150	180	176	164	146	118	82	60
S6 H 25/16	6”	25	18,5	16	3”	150	230	228	216	192	152	106	75
S6 H 30/18	6”	30	22	18	3”	150	267	258	238	211	176	128	100
S6 H 35/21	6”	35	26	21	3”	150	306	304	284	252	211	160	128
S6 H 40/25	6”	40	30	25	3”	150	331	329	318	295	258	216	180
S6 H 50/28	6”	50	37	28	3”	150	371	369	356	332	292	240	208

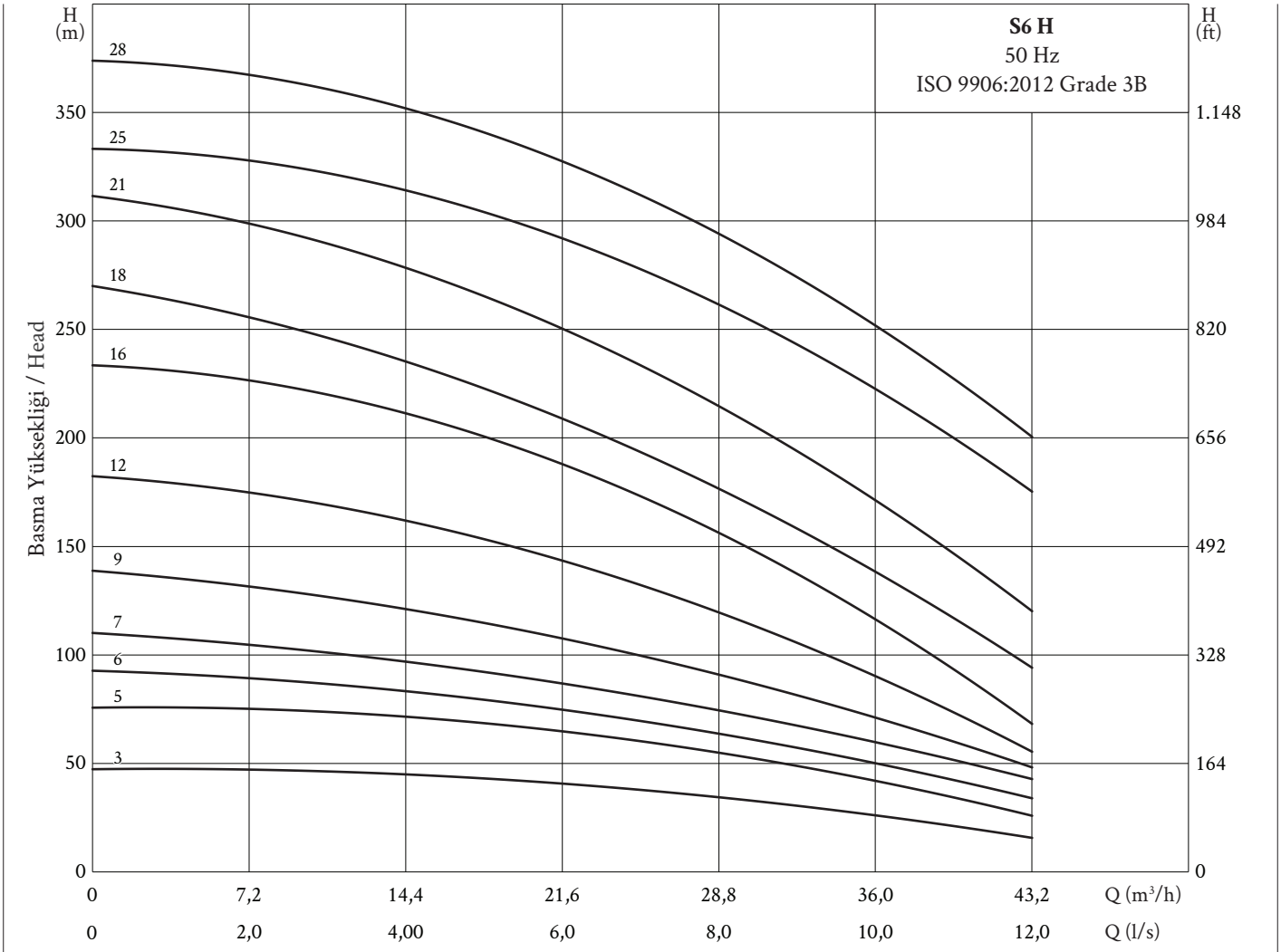

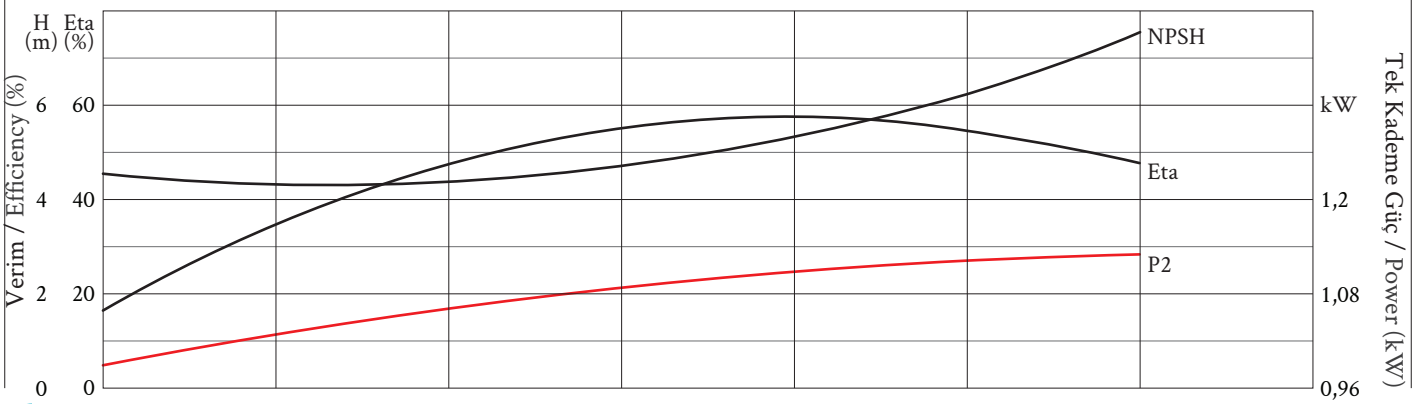

Pompa Tipi *Pump Type*	Motor			Kademe Sayısı *Stage No.*	Pompa Çıkışı *Pump Outlet*	Ø max *(mm)*	Basma Yüksekliği / *Head (m)*						
	Ø	HP	kW				0 *(l/s)*	5,0	7,0	10,0	12,0	15,0	17,0
							0 *(m³/h)*	18,0	25,2	36,0	43,2	54,0	61,2
S6 P 07/02	6”	7,5	5,5	2	3”	150	35	33	32	31	30	23	11
S6 P 10/03	6”	10	7,5	3	3”	150	47	46	45	44	42	36	23
S6 P 12/04	6”	12,5	9	4	3”	150	62	61	60	58	55	45	26
S6 P 15/05	6”	15	11	5	3”	150	75	73	71	68	65	55	30
S6 P 20/06	6”	20	15	6	3”	150	90	87	84	80	75	65	33
S6 P 20/07	6”	20	15	7	3”	150	103	97	93	86	82	70	36

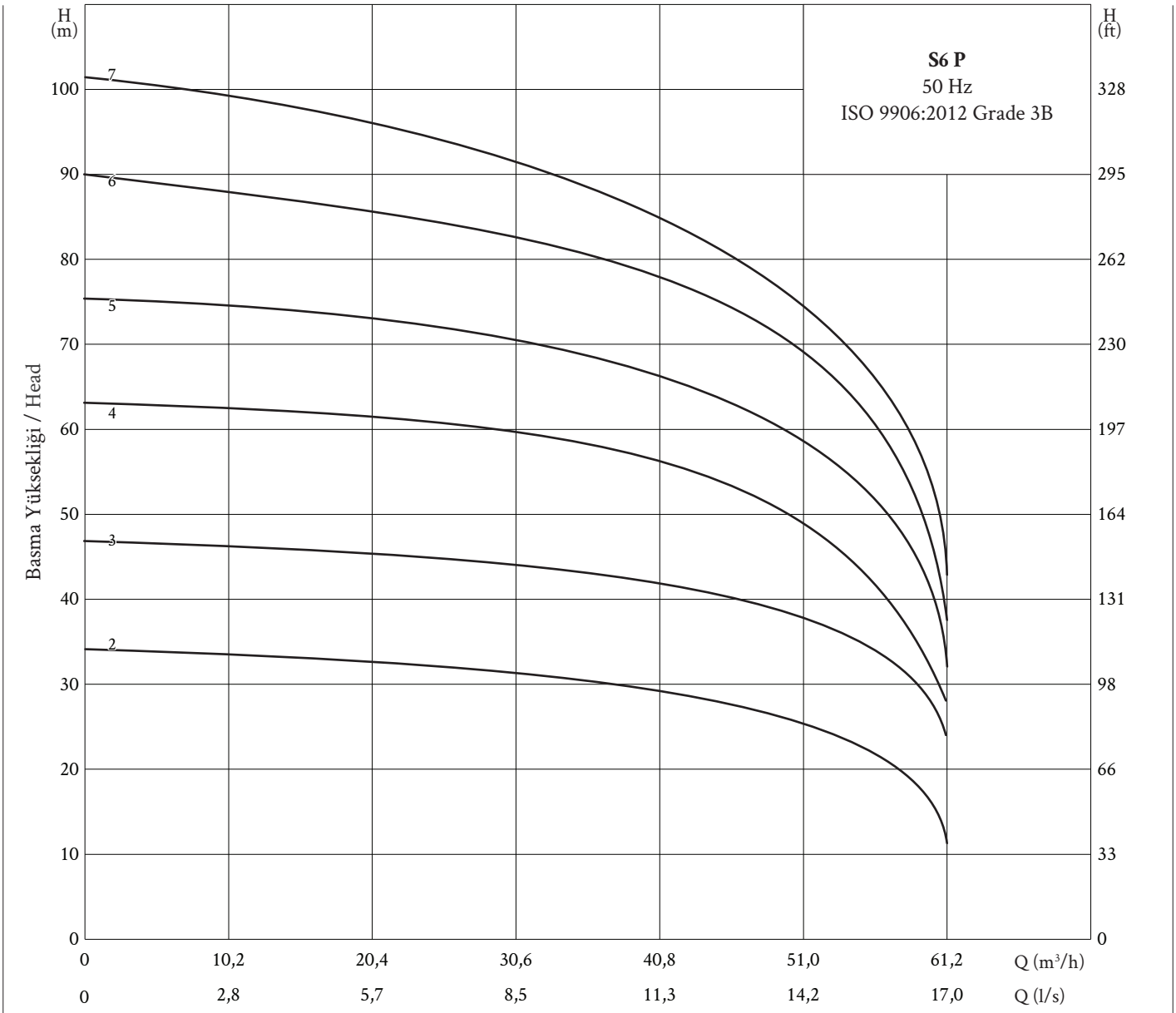

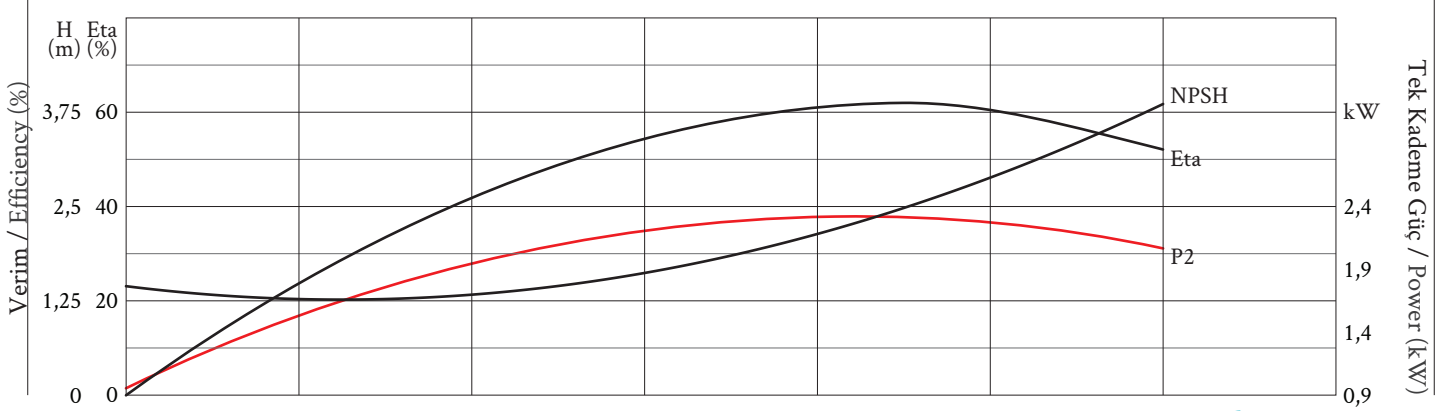

ÜSTÜNEL
Dalgıç Pompa-Submersible Pump

DÖKÜM DALGIÇ POMPA

CAST IRON SUBMERSIBLE PUMPS

Kullanım Yerleri

Applications

Su Temini	*Raw Water Supply*
Sulama Sistemleri	*Irrigation Systems*
Zemin Suyu Alçaltma	*Groundwater lowering*
Basınçlandırma	*Pressure Boosting*
Endüstriyel Uygulamalar	*Industrial Applications*
Temiz, içinde lif ve katı maddeler bulunmayan, agresif sıvıların pompalanması	*Pumping of clean, thin and non-aggressive liquids without fibres or solid particules*

Çalışma Koşulları

Operating Conditions

Maksimum Sıvı Sıcaklığı	30°C	*Max. Liquid Temperature*	*30°C*
Maksimum Kum Miktarı	50 gr/m^3	*Max. Sand Content*	*50 gr/m^3*
Motor Koruma Sınıfı	IP68	*Motor Protection Class*	*IP68*
Maksimum Çalışma Sesi	70dB	*Max. Operation Sound*	*70dB*
Maksimum Kalkış Sayısı	20 (kalkış/saat)	*Max. Starting Number*	*20 (start/hour)*
Motor Dönüş Yönü	İki Yönlü	*Motor Rotation Direction*	*Bidirectional*

*Deniz suyu uygulamalarında katadik koruma önerilmektedir.

**Cathodical protection is suggested for seawater applications.*

Pompa Çeşitleri

Pump Range

Tipi	Type	S5A	S6A	S6B	S6D	S6E	S6F	S7A	S8A	S8B	S8D	S10A	S10B	S12A	S12B
Çıkış Bağlantısı	*Outlet Connection*	2,5" 3"	3" 4"	3" 4"	3" 4"	4"	4"	4" 5"	5"	5"	5"	6"	6"	6"	6"
Mil Çapı (mm)	*Shaft Diameter (mm)*	20	25	25	25	25	25	25	30	25	30	30	30	40	30
Su Verebilme Kapasitesi (m^3/h)	*Water Capacity (m^3/h)*	25	45	36	50	70	80	90	100	120	140	200	300	400	450
Emiş ve Çıkış: Pik Döküm, Sfero Döküm veya Bronz	*Suction and Outlet: Casting Cast Iron, Ductile Cast Iron or Bronze*	+	+	+	+	+	+	+	+	+	+	+	+	+	+
Kademe: Pik Döküm (EN-GJL-250), Sfero Döküm (EN-GJS25-500-7) veya Bronz (ASTM B145-4A)	*Stage: Cast Iron (EN-GJL-250), Ductile Cast Iron (EN-GJS25-500-7) or Bronze / ASTM B145-4-7A*	+	+	+	+	+	+	+	+	+	+	+	+	+	+
Fan: Sfero Döküm veya Bronz	*Impeller: Ductile Cast Iron or Bronze*	+	+	+	+	+	+	+	+	+	+	+	+	+	+

*Pompa çıkışları 8 diş

*S5A 11 diş

**Pump's outlet 8 threads*

**S5A 11 threads*

Pompa Kodlaması

Identification Code

S6 D 12/5

Pompa Çapı	*Pump Diameter*
Model	*Model Code*
Motor Gücü (HP)	*Motor Power (HP)*
Kademe Sayısı	*Stage Number*

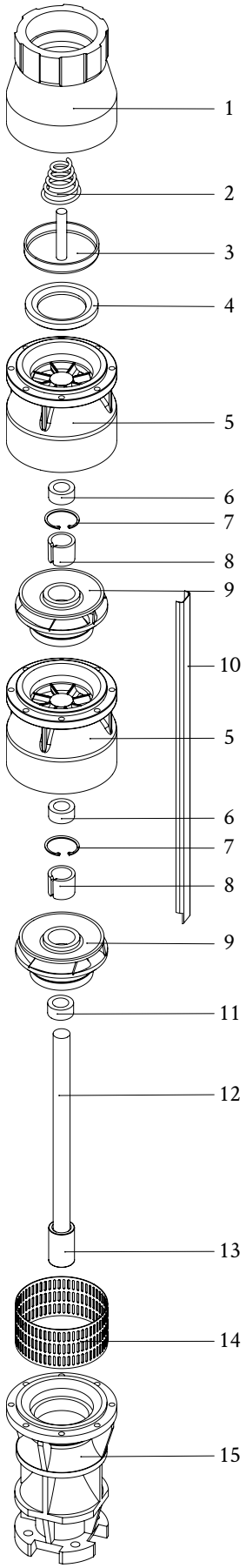

No	Parça Adı	Malzeme
1	Pompa Çıkışı	Döküm (EN-GJL-250)
2	Klepe Yayı	Paslanmaz Çelik (AISI 304)
3	Klepe	Paslanmaz Çelik (AISI 304)
4	Klepe Lastiği	Kauçuk (NBR)
5	Kademe	Döküm (EN-GJL-250)
6	Kademe Lastiği	Kauçuk (NBR)
7	Kademe Segmanı	Çelik
8	Pens (Fan Tesbit Burcu)	Paslanmaz Çelik (AISI 420)
9	Fan	Döküm (EN-GJL-250)
10	Kablo Koruyucu	Paslanmaz Çelik (AISI 304)
11	Emiş Adaptörü Lastiği	Kauçuk (NBR)
12	Mil	Paslanmaz Çelik (AISI 420)
13	Kaplin	Paslanmaz Çelik (AISI 420)
14	Filtre	Paslanmaz Çelik (AISI 304)
15	Emiş Adaptörü	Döküm (EN-GJL-250)

No	Components	Material
1	Outlet	Cast Iron (EN-GJL-250)
2	Valve Spring	Stainless Steel (AISI 304)
3	Valve	Stainless Steel (AISI 304)
4	Valve Bearing	Rubber (NBR)
5	Stage	Cast Iron (EN-GJL-250)
6	Stage Bearing	Rubber (NBR)
7	Stage Ring	Steel
8	Split Cone / Collet	Stainless Steel (AISI 420)
9	Impeller	Cast Iron (EN-GJL-250)
10	Cable Guard	Stainless Steel (AISI 304)
11	Suction Bearing	Rubber (NBR)
12	Shaft	Stainless Steel (AISI 420)
13	Coupling	Stainless Steel (AISI 420)
14	Strainer	Stainless Steel (AISI 304)
15	Suction	Cast Iron (EN-GJL-250)

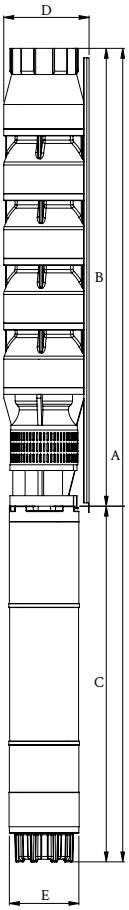

Pompa Tipi *Pump Type*	Motor				Ölçüler / *Dimensions (mm)*					Toplam Ağırlık *Total Weight (kg)*
	Tipi *Type*	Ø	HP	kW	Boy / *Length*			Çap / *Dia*		
					A	B	C	D	E	
S5 A 03/03	S095MC/03-T	4”	3	2,2	1045	550	495	130	95	28
S5 A 04/04	S095MC/04-T	4”	4	3	1205	650	555	130	95	36
S5 A 04/05	S095MC/04-T	4”	4	3	1305	750	555	130	95	41
S5 A 05/06	S145MC/05	6”	5,5	4	1475	850	625	130	145	75
S5 A 07/07	S145MC/07	6”	7,5	5,5	1575	950	625	130	145	79
S5 A 07/08	S145MC/07	6”	7,5	5,5	1675	1050	625	130	145	84
S5 A 07/09	S145MC/07	6”	7,5	5,5	1775	1150	625	130	145	88
S5 A 07/10	S145MC/07	6”	7,5	5,5	1875	1250	625	130	145	93
S5 A 10/11	S145MC/10	6”	10	7,5	2010	1350	660	130	145	101
S5 A 10/12	S145MC/10	6”	10	7,5	2110	1450	660	130	145	106
S5 A 10/13	S145MC/10	6”	10	7,5	2210	1550	660	130	145	110
S5 A 12/14	S145MC/12	6”	12,5	9	2355	1650	705	130	145	120
S5 A 12/15	S145MC/12	6”	12,5	9	2455	1750	705	130	145	124
S5 A 15/16	S145MC/15	6”	15	11	2600	1850	750	130	145	135
S5 A 15/17	S145MC/15	6”	15	11	2700	1950	750	130	145	139
S5 A 15/18	S145MC/15	6”	15	11	2800	2050	750	130	145	144
S5 A 17/19	S145MC/17	6”	17,5	13	2950	2150	800	130	145	153
S5 A 17/20	S145MC/17	6”	17,5	13	3050	2250	800	130	145	158
S5 A 20/21	S145MC/20	6”	20	15	3200	2350	850	130	145	168
S6 A 10/05	S145MC/10	6”	10	7,5	1635	975	660	150	145	100
S6 A 12/06	S145MC/12	6”	12,5	9	1802	1097	705	150	145	112
S6 A 15/07	S145MC/15	6”	15	11	1960	1210	750	150	145	124
S6 A 17/08	S145MC/17	6”	17,5	13	2133	1333	800	150	145	136
S6 A 20/09	S145MC/20	6”	20	15	2297	1447	850	150	145	148
S6 A 20/10	S145MC/20	6”	20	15	2413	1563	850	150	145	155
S6 A 25/11	S145MC/25	6”	25	18,5	2611	1681	930	150	145	170
S6 A 25/12	S145MC/25	6”	25	18,5	2733	1803	930	150	145	177
S6 A 30/13	S145MC/30	6”	30	22	2930	1920	1010	150	145	192
S6 A 30/14	S145MC/30	6”	30	22	3052	2042	1010	150	145	199
S6 A 35/15	S145MC/35	6”	35	26	3214	2164	1050	150	145	209
S6 A 35/16	S145MC/35	6”	35	26	3336	2286	1050	150	145	216
S6 A 40/17	S145MC/40	6”	40	30	3494	2394	1100	150	145	228
S6 A 40/18	S145MC/40	6”	40	30	3612	2512	1100	150	145	235
S6 A 40/19	S145MC/40	6”	40	30	3730	2630	1100	150	145	241
S6 B 05/03	S145MC/05	6”	5,5	4	1367	742	625	150	145	82
S6 B 07/04	S145MC/07	6”	7,5	5,5	1485	860	625	150	145	89
S6 B 07/05	S145MC/07	6”	7,5	5,5	1600	975	625	150	145	96
S6 B 10/06	S145MC/10	6”	10	7,5	1757	1097	660	150	145	107
S6 B 10/07	S145MC/10	6”	10	7,5	1870	1210	660	150	145	114
S6 B 12/08	S145MC/12	6”	12,5	9	2038	1333	705	150	145	125
S6 B 12/09	S145MC/12	6”	12,5	9	2152	1447	705	150	145	125
S6 B 15/10	S145MC/15	6”	15	11	2313	1563	750	150	145	144
S6 B 15/11	S145MC/15	6”	15	11	2431	1681	750	150	145	151
S6 B 17/12	S145MC/17	6”	17,5	13	2603	1803	800	150	145	163
S6 B 20/13	S145MC/20	6”	20	15	2770	1920	850	150	145	176
S6 B 25/14	S145MC/25	6”	25	18,5	2967	2037	930	150	145	192
S6 B 25/16	S145MC/25	6”	25	18,5	3203	2273	930	150	145	202
S6 B 30/19	S145MC/30	6”	30	22	3637	2627	1010	150	145	231
S6 B 40/22	S145MC/40	6”	40	30	4081	2981	1100	150	145	260
S6 B 40/25	S145MC/40	6”	40	30	4435	3335	1100	150	145	280

Pompa Tipi *Pump Type*	Motor				Ölçüler / *Dimensions (mm)*					Toplam Ağırlık *Total Weight (kg)*
	Tipi *Type*	Ø	HP	kW	Boy / *Length*			Çap / *Dia*		
					A	B	C	D	E	
S6 D 07/03	S145MC/07	6”	7,5	5,5	1367	742	625	150	145	82
S6 D 10/04	S145MC/10	6”	10	7,5	1520	860	660	150	145	93
S6 D 12/05	S145MC/12	6”	12,5	9	1680	975	705	150	145	105
S6 D 15/06	S145MC/15	6”	15	11	1850	1100	750	150	145	118
S6 D 17/07	S145MC/17	6”	17,5	13	2010	1210	800	150	145	130
S6 D 20/08	S145MC/20	6”	20	15	2183	1333	850	150	145	142
S6 D 25/09	S145MC/25	6”	25	18,5	2377	1447	930	150	145	157
S6 D 25/10	S145MC/25	6”	25	18,5	2493	1563	930	150	145	164
S6 D 30/11	S145MC/30	6”	30	22	2691	1681	1010	150	145	180
S6 D 35/12	S145MC/35	6”	35	26	2853	1803	1050	150	145	191
S6 D 35/13	S145MC/35	6”	35	26	2970	1920	1050	150	145	196
S6 D 35/14	S145MC/35	6”	35	26	3087	2037	1050	150	145	202
S6 D 40/15	S145MC/40	6”	40	30	3254	2154	1100	150	145	215
S6 D 40/16	S145MC/40	6”	40	30	3371	2271	1100	150	145	222
S6 D 40/17	S145MC/40	6”	40	30	3488	2388	1100	150	145	228
S6 D 50/18	S145MC/50	6”	50	37	3685	2505	1180	150	145	241
S6 D 50/19	S145MC/50	6”	50	37	3802	2622	1180	150	145	248
S6 D 50/20	S145MC/50	6”	50	37	3919	2739	1180	150	145	254
S6 E 05/01	S145MC/05	6”	5,5	4	1790	1165	625	150	145	111
S6 E 07/02	S145MC/07	6”	7,5	5,5	1950	1325	625	150	145	122
S6 E 10/03	S145MC/10	6”	10	7,5	2165	1505	660	150	145	138
S6 E 15/04	S145MC/15	6”	15	11	2485	1735	750	150	145	165
S6 E 17/05	S145MC/17	6”	17,5	13	2725	1925	800	150	145	178
S6 E 20/06	S145MC/20	6”	20	15	2965	2115	850	150	145	201
S6 E 25/07	S145MC/25	6”	25	18,5	3285	2355	930	150	145	227
S6 E 30/08	S145MC/30	6”	30	22	3555	2545	1010	150	145	247
S6 E 30/09	S145MC/30	6”	30	22	3695	2685	1010	150	145	254
S6 E 35/10	S145MC/35	6”	35	26	3955	2905	1050	150	145	276
S6 E 40/11	S145MC/40	6”	40	30	4225	3125	1100	150	145	295
S6 E 40/12	S145MC/40	6”	40	30	4365	3265	1100	150	145	302
S6 E 50/13	S145MC/50	6”	50	37	4665	3485	1180	150	145	317
S6 E 50/14	S145MC/50	6”	50	37	4805	3625	1180	150	145	323
S6 E 50/15	S145MC/50	6”	50	37	4945	3765	1180	150	145	330
S6 F 05/01	S145MC/05	6”	5,5	4	1435	810	625	150	145	116
S6 F 10/02	S145MC/10	6”	10	7,5	1670	1010	660	150	145	137
S6 F 15/03	S145MC/15	6”	15	11	1990	1240	750	150	145	164
S6 F 20/04	S145MC/20	6”	20	15	2330	1480	850	150	145	194
S6 F 25/05	S145MC/25	6”	25	18,5	2650	1720	930	150	145	220
S6 F 30/06	S145MC/30	6”	30	22	2920	1910	1010	150	145	241
S6 F 35/07	S145MC/35	6”	35	26	3180	2130	1050	150	145	263
S6 F 40/08	S145MC/40	6”	40	30	3450	2350	1100	150	145	283
S6 F 50/09	S145MC/50	6”	50	37	3750	2570	1180	150	145	298
S6 F 50/10	S145MC/50	6”	50	37	3890	2710	1180	150	145	305

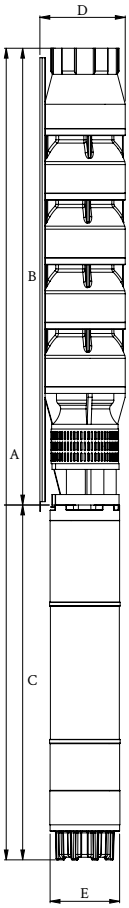

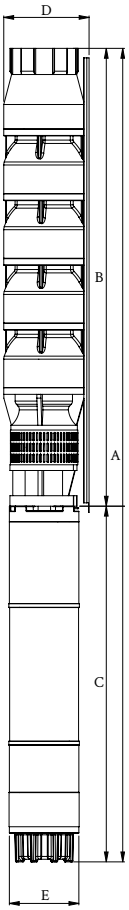

Pompa Tipi *Pump Type*	Motor				Ölçüler / *Dimensions (mm)*					Toplam Ağırlık *Total Weight (kg)*
	Tipi *Type*	Ø	HP	kW	Boy / *Length*			Çap / *Dia*		
					A	B	C	D	E	
S7 A 15/02	S145MC/15	6”	15	11	1442	692	750	180	145	101
S7 A 20/03	S145MC/20	6”	20	15	1677	827	850	180	145	122
S7 A 25/04	S145MC/25	6”	25	18,5	1893	963	930	180	145	141
S7 A 30/05	S145MC/30	6”	30	22	2113	1103	1010	180	145	160
S7 A 40/06	S145MC/40	6”	40	30	2185	1275	910	180	145	207
S7 A 50/07	S190MC/50	8”	50	37	2401	1411	990	180	193	234
S7 A 50/08	S190MC/50	8”	50	37	2537	1547	990	180	193	244
S7 A 60/09	S190MC/60	8”	60	45	2743	1683	1060	180	193	269
S7 A 70/10	S190MC/70	8”	70	52	2949	1819	1130	180	193	294
S7 A 80/11	S190MC/80	8”	80	60	3155	1955	1200	180	193	319
S7 A 90/12	S190MC/90	8”	90	67	3391	2091	1300	180	193	350
S7 A 90/13	S190MC/90	8”	90	67	3527	2227	1300	180	193	360
S7 A 100/14	S190MC/100	8”	100	75	3713	2363	1350	180	193	379
S7 A 110/15	S190MC/110	8”	110	81	3899	2499	1400	180	193	401
S7 A 125/16	S190MC/125	8”	125	92	4105	2635	1470	180	193	430
S7 A 150/17	S250MC/150	10”	150	110	4331	2771	1560	180	240	457
S8 A 20/02	S145MC/20	6”	20	15	1642	792	850	198	145	128
S8 A 30/03	S145MC/30	6”	30	22	1952	942	1010	198	145	159
S8 A 40/04	S145MC/40	6”	40	30	2194	1094	1100	198	145	182
S8 A 50/05	S190MC/50	8”	50	37	2235	1245	990	198	193	235
S8 A 60/06	S190MC/60	8”	60	45	2464	1404	1060	198	193	263
S8 A 70/07	S190MC/70	8”	70	52	2687	1557	1130	198	193	291
S8 A 80/08	S190MC/80	8”	80	60	2910	1710	1200	198	193	319
S8 A 90/09	S190MC/90	8”	90	67	3163	1863	1300	198	193	353
S8 A 100/10	S190MC/100	8”	100	75	3366	2016	1350	198	193	375
S8 A 110/11	S190MC/110	8”	110	81	3569	2169	1400	198	193	400
S8 A 125/12	S190MC/125	8”	125	92	3792	2322	1470	198	193	432
S8 A 125/13	S190MC/125	8”	125	92	3945	2475	1470	198	193	445
S8 A 150/14	S250MC/150	10”	150	110	4188	2628	1560	198	240	475
S8 A 150/15	S250MC/150	10”	150	110	4341	2781	1560	198	240	488
S8 B 12/01	S145MC/12	6”	12,5	9	1330	625	705	198	145	97
S8 B 20/02	S145MC/20	6”	20	15	1618	768	850	198	145	126
S8 B 35/03	S145MC/35	6”	35	26	1961	911	1050	198	145	160
S8 B 50/04	S190MC/50	8”	50	37	2044	1054	990	198	193	215
S8 B 60/05	S190MC/60	8”	60	45	2257	1197	1060	198	193	242
S8 B 70/06	S190MC/70	8”	70	52	2470	1340	1130	198	193	270
S8 B 85/07	S190MC/85	8”	85	63	2733	1483	1250	198	193	302
S8 B 100/08	S190MC/100	8”	100	75	2976	1626	1350	198	193	340
S8 B 110/09	S190MC/110	8”	110	81	3169	1769	1400	198	193	364
S8 B 125/10	S190MC/125	8”	125	92	3382	1912	1470	198	193	396
S8 B 125/11	S190MC/125	8”	125	92	3525	2055	1470	198	193	408
S8 B 150/12	S250MC/150	10”	150	110	3758	2198	1560	198	240	438

Pompa Tipi *Pump Type*	Motor				Ölçüler / *Dimensions (mm)*					Toplam Ağırlık *Total Weight (kg)*
	Tipi *Type*	Ø	HP	kW	Boy / *Length*			Çap / *Dia*		
					A	B	C	D	E	
S8 D 12/01	S145MC/12	6”	12,5	9	1341	636	705	211	145	98
S8 D 20/02-1	S145MC/20	6”	20	15	1642	792	850	211	145	131
S8 D 25/02	S145MC/25	6”	25	18,5	1722	792	930	211	145	140
S8 D 30/03-1	S145MC/30	6”	30	22	1778	948	830	211	145	186
S8 D 40/03	S145MC/40	6”	40	30	1858	948	910	211	145	196
S8 D 50/04	S190MC/50	8”	50	37	2094	1104	990	211	193	229
S8 D 60/05	S190MC/60	8”	60	45	2320	1260	1060	211	193	261
S8 D 75/06	S190MC/75	8”	75	55	2586	1416	1170	211	193	299
S8 D 85/07	S190MC/85	8”	85	63	2822	1572	1250	211	193	329
S8 D 100/08	S190MC/100	8”	100	75	3078	1728	1350	211	193	370
S8 D 110/09	S190MC/110	8”	110	81	3284	1884	1400	211	193	399
S8 D 125/10	S190MC/125	8”	125	92	3510	2040	1470	211	193	434
S8 D 150/11	S250MC/150	10”	150	110	3756	2196	1560	211	240	468
S8 D 150/12	S250MC/150	10”	150	110	3912	2352	1560	211	240	484
S8 D 150/13	S250MC/150	10”	150	110	4068	2508	1560	211	240	501
S10 A 30/01-1	S145MC/30	6”	30	22	1745	735	1010	240	145	155
S10 A 35/01	S145MC/35	6”	35	26	1785	735	1050	240	145	159
S10 A 50/02-1	S190MC/50	8”	50	37	1893	903	990	240	193	225
S10 A 60/02	S190MC/60	8”	60	45	1963	903	1060	240	193	240
S10 A 60/03-2	S190MC/60	8”	60	45	2131	1071	1060	240	193	263
S10 A 70/03-1	S190MC/70	8”	70	52	2201	1071	1130	240	193	278
S10 A 80/03	S190MC/80	8”	80	60	2271	1071	1200	240	193	293
S10 A 85/04-2	S190MC/85	8”	85	63	2489	1239	1250	240	193	321
S10 A 90/04-1	S190MC/90	8”	90	67	2539	1239	1300	240	193	337
S10 A 100/04	S190MC/100	8”	100	75	2589	1239	1350	240	193	346
S10 A 125/05	S190MC/125	8”	125	92	2877	1407	1470	240	193	400
S10 A 150/06-2	S250MC/150	10”	150	110	3135	1575	1560	240	240	440
S10 B 50/01	S190MC/50	8”	50	37	1835	845	990	245	193	158
S10 B 100/02	S190MC/100	8”	100	75	2385	1035	1350	245	193	256
S10 B 150/03	S250MC/150	10”	150	110	2715	1225	1490	245	240	432
S10 B 200/04	S250MC/200	10”	200	150	3220	1415	1805	245	240	537
S10 B 250/05	S250MC/250	10”	250	185	3670	1605	2065	245	240	627
S12 A 100/01	S250MC/100	10”	100	75	2220	990	1230	305	240	487
S12 A 150/02	S250MC/150	10”	180	130	2730	1240	1490	305	240	609
S12 A 200/03	S250MC/200	10”	250	180	3295	1490	1805	305	240	756
S12 A 250/04	S250MC/250	10”	300	200	3805	1740	2065	305	240	894
S12 B 110/01	S250MC/100	10”	110	81	2220	990	1230	305	240	487
S12 B 200/02	S250MC/200	10”	200	150	2900	1240	1805	305	240	690
S12 B 300/03	S250MC/300	10”	300	220	3660	1490	2170	305	240	853

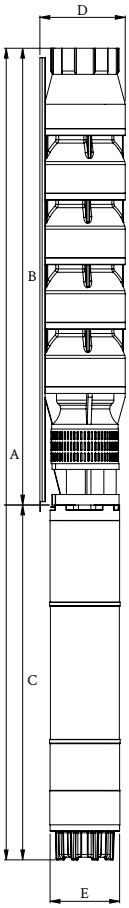

Pompa Tipi *Pump Type*	Motor			Kad. Sayısı *Stage No.*	Pompa Çıkışı *Pump Outlet*	Ø max *(mm)*	Basma Yüksekliği / *Head (m)*								
	Ø	HP	kW				0 *(l/s)*	3,0	4,0	5,0	6,0	7,0	8,0	9,0	10,0
							0 *(m³/h)*	10,8	14,4	18,0	21,6	25,2	28,8	32,4	36,0
S5 A 03/03	4”	3	2,2	3	2,5”-3”	130	30	26	25	24	22	19	16	9	6
S5 A 04/04	4”	4	3	4	2,5”-3”	130	36	33	32	30	26	23	20	13	8
S5 A 04/05	4”	4	3	5	2,5”-3”	130	43	39	37	35	32	27	25	24	10
S5 A 05/06	6”	5,5	4	6	2,5”-3”	130	53	50	49	47	42	37	39	28	11
S5 A 07/07	6”	7,5	5,5	7	2,5”-3”	130	63	60	58	55	50	45	47	34	14
S5 A 07/08	6”	7,5	5,5	8	2,5”-3”	130	71	67	65	61	55	50	49	39	17
S5 A 07/09	6”	7,5	5,5	9	2,5”-3”	130	79	74	71	66	60	54	51	44	19
S5 A 07/10	6”	7,5	5,5	10	2,5”-3”	130	83	78	75	70	64	58	55	48	26
S5 A 10/11	6”	10	7,5	11	2,5”-3”	145	91	87	82	77	70	63	52	42	30
S5 A 10/12	6”	10	7,5	12	2,5”-3”	145	100	93	88	82	74	67	56	46	33
S5 A 10/13	6”	10	7,5	13	2,5”-3”	145	108	105	100	93	84	74	62	50	34
S5 A 12/14	6”	12,5	9	14	2,5”-3”	145	118	113	108	100	90	80	66	52	35
S5 A 12/15	6”	12,5	9	15	2,5”-3”	145	127	123	116	108	96	88	70	55	36
S5 A 15/16	6”	15	11	16	2,5”-3”	145	141	134	126	117	104	92	74	58	37
S5 A 15/17	6”	15	11	17	2,5”-3”	145	152	143	135	125	111	98	78	61	38
S5 A 15/18	6”	15	11	18	2,5”-3”	145	158	149	141	131	117	103	84	66	43
S5 A 17/19	6”	17,5	13	19	2,5”-3”	145	166	156	148	137	123	110	92	72	48
S5 A 17/20	6”	17,5	13	20	2,5”-3”	145	172	160	154	144	130	117	98	79	54
S5 A 20/21	6”	20	15	21	2,5”-3”	145	178	168	161	151	138	124	107	86	60

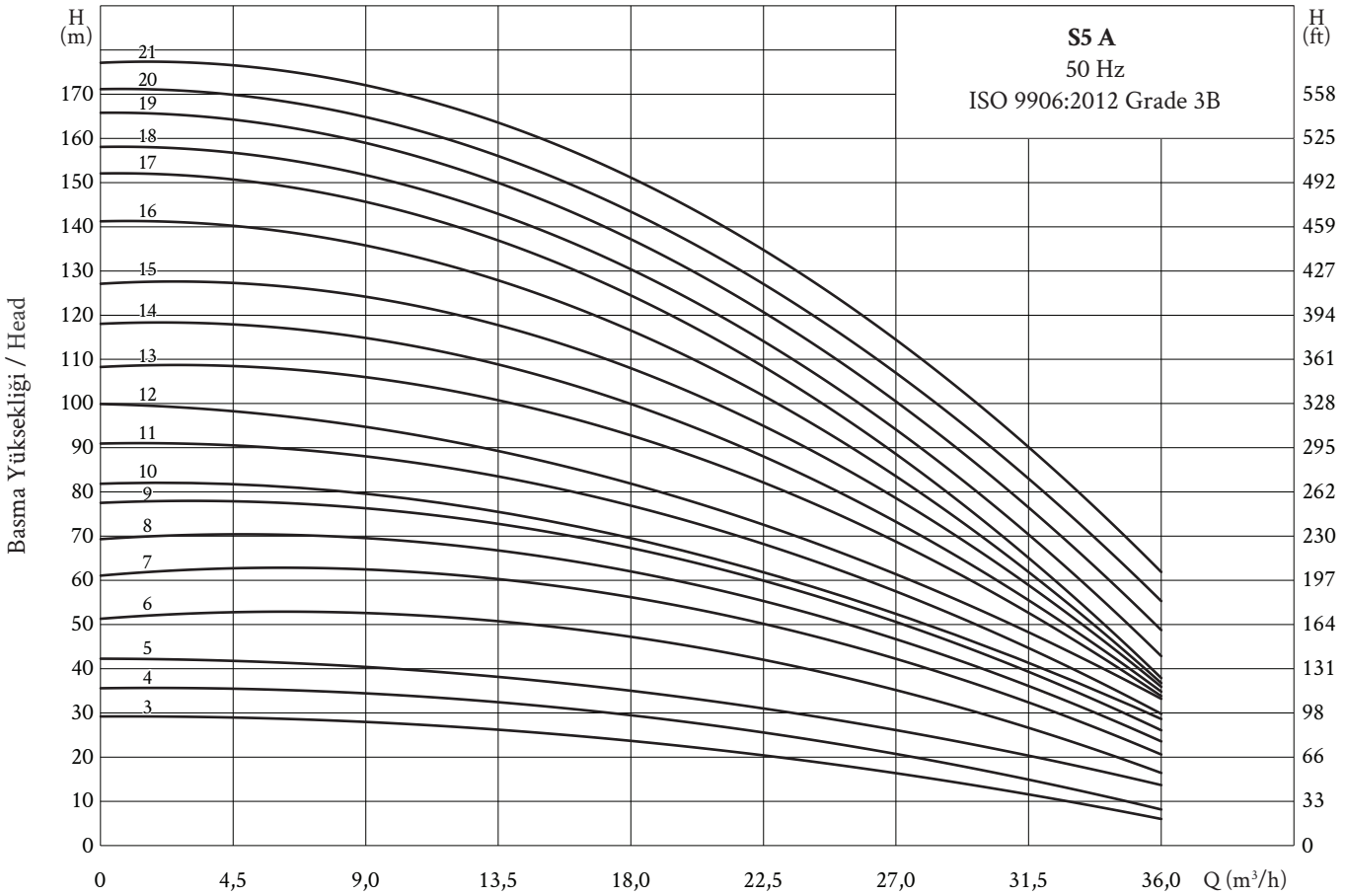

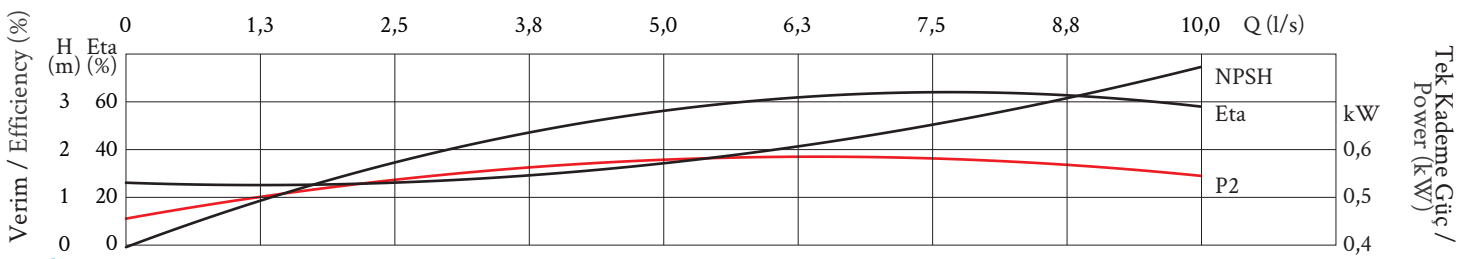

Pompa Tipi *Pump Type*	Motor			Kad. Sayısı *Stage No.*	Pompa Çıkışı *Pump Outlet*	Ø max *(mm)*	Basma Yüksekliği / *Head (m)*								
	Ø	HP	kW				0 *(l/s)*	6,0	8,0	10,0	11,0	12,0	13,0	14,0	15,0
							0 *(m³/h)*	21,6	28,8	36,0	39,6	43,2	46,8	50,4	54,0
S6 A 10/05	6”	10	7,5	5	3”-4”	150	64	60	57	52	50	48	44	42	38
S6 A 12/06	6”	12,5	9	6	3”-4”	150	76	72	67	63	60	58	54	50	46
S6 A 15/07	6”	15	11	7	3”-4”	150	87	82	78	72	68	65	61	56	50
S6 A 17/08	6”	17,5	13	8	3”-4”	150	98	94	88	82	78	75	70	66	60
S6 A 20/09	6”	20	15	9	3”-4”	150	110	106	100	94	90	86	81	76	68
S6 A 20/10	6”	20	15	10	3”-4”	150	120	116	110	104	100	96	90	84	76
S6 A 25/11	6”	25	18,5	11	3”-4”	150	134	130	124	117	112	108	103	97	87
S6 A 25/12	6”	25	18,5	12	3”-4”	150	149	142	134	126	122	118	112	104	94
S6 A 30/13	6”	30	22	13	3”-4”	150	158	152	146	138	134	130	124	114	104
S6 A 30/14	6”	30	22	14	3”-4”	150	174	166	158	150	144	138	132	124	110
S6 A 35/15	6”	35	26	15	3”-4”	150	184	176	168	158	154	146	138	130	118
S6 A 35/16	6”	35	26	16	3”-4”	150	198	189	180	168	162	156	149	142	128
S6 A 40/17	6”	40	30	17	3”-4”	150	210	196	186	178	172	166	157	149	135
S6 A 40/18	6”	40	30	18	3”-4”	150	214	206	197	184	177	170	161	154	140
S6 A 40/19	6”	40	30	19	3”-4”	150	228	216	206	194	187	180	172	164	152

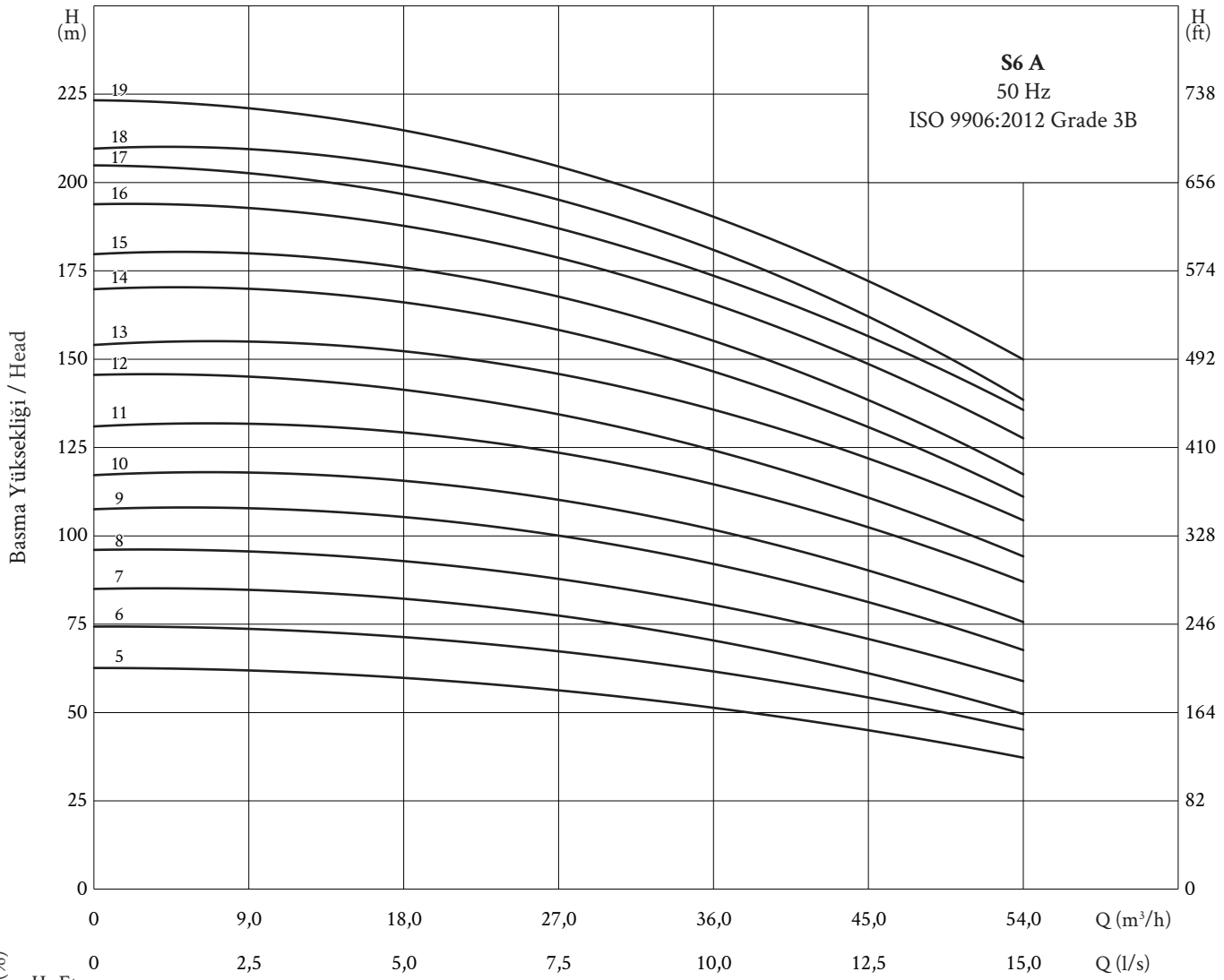

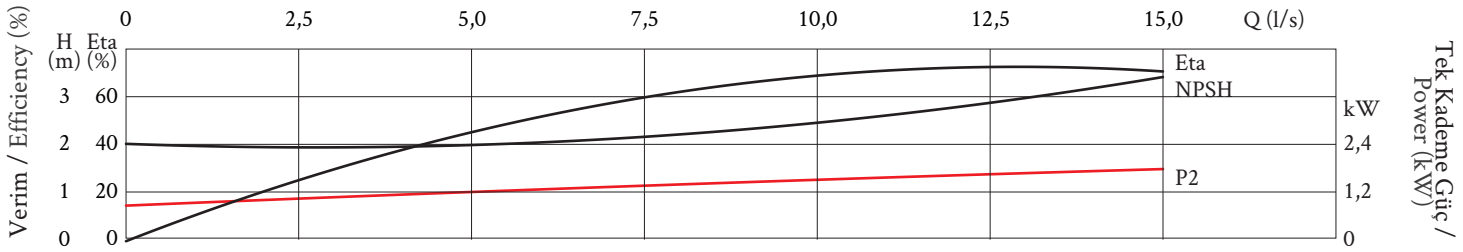

Pompa Tipi *Pump Type*	Motor			Kad. Sayısı *Stage No.*	Pompa Çıkışı *Pump Outlet*	Ø max *(mm)*	Basma Yüksekliği / *Head (m)*								
	Ø	HP	kW				0 *(l/s)*	6,0	7,0	8,0	9,0	10,0	11,0	12,0	13,0
							0 *(m³/h)*	21,6	25,2	28,8	32,4	36,0	39,6	43,2	46,8
S6 B 05/03	6”	5,5	4	3	3”-4”	150	48	38	36	32	28	24	20	16	10
S6 B 07/04	6”	7,5	5,5	4	3”-4”	150	54	48	44	41	36	34	26	22	14
S6 B 07/05	6”	7,5	5,5	5	3”-4”	150	62	54	50	46	40	36	30	24	17
S6 B 10/06	6”	10	7,5	6	3”-4”	150	70	58	54	50	44	40	34	27	19
S6 B 10/07	6”	10	7,5	7	3”-4”	150	74	63	58	54	48	44	36	29	23
S6 B 12/08	6”	12,5	9	8	3”-4”	150	88	73	67	62	54	48	40	32	27
S6 B 12/09	6”	12,5	9	9	3”-4”	150	98	84	76	72	62	55	46	38	29
S6 B 15/10	6”	15	11	10	3”-4”	150	118	97	88	82	72	65	54	44	34
S6 B 15/11	6”	15	11	11	3”-4”	150	136	110	102	94	83	74	64	52	38
S6 B 17/12	6”	17,5	13	12	3”-4”	150	154	124	116	108	94	84	72	59	45
S6 B 20/13	6”	20	15	13	3”-4”	150	165	141	132	124	110	100	82	68	54
S6 B 25/14	6”	25	18,5	14	3”-4”	150	185	158	148	138	124	115	94	79	60
S6 B 25/16	6”	25	18,5	16	3”-4”	150	199	174	165	156	140	129	110	94	71
S6 B 30/19	6”	30	22	19	3”-4”	150	216	196	186	178	161	150	128	106	80
S6 B 40/22	6”	40	30	22	3”-4”	150	251	227	220	204	186	170	156	142	90
S6 B 40/25	6”	40	30	25	3”-4”	150	284	250	240	228	210	197	176	156	124

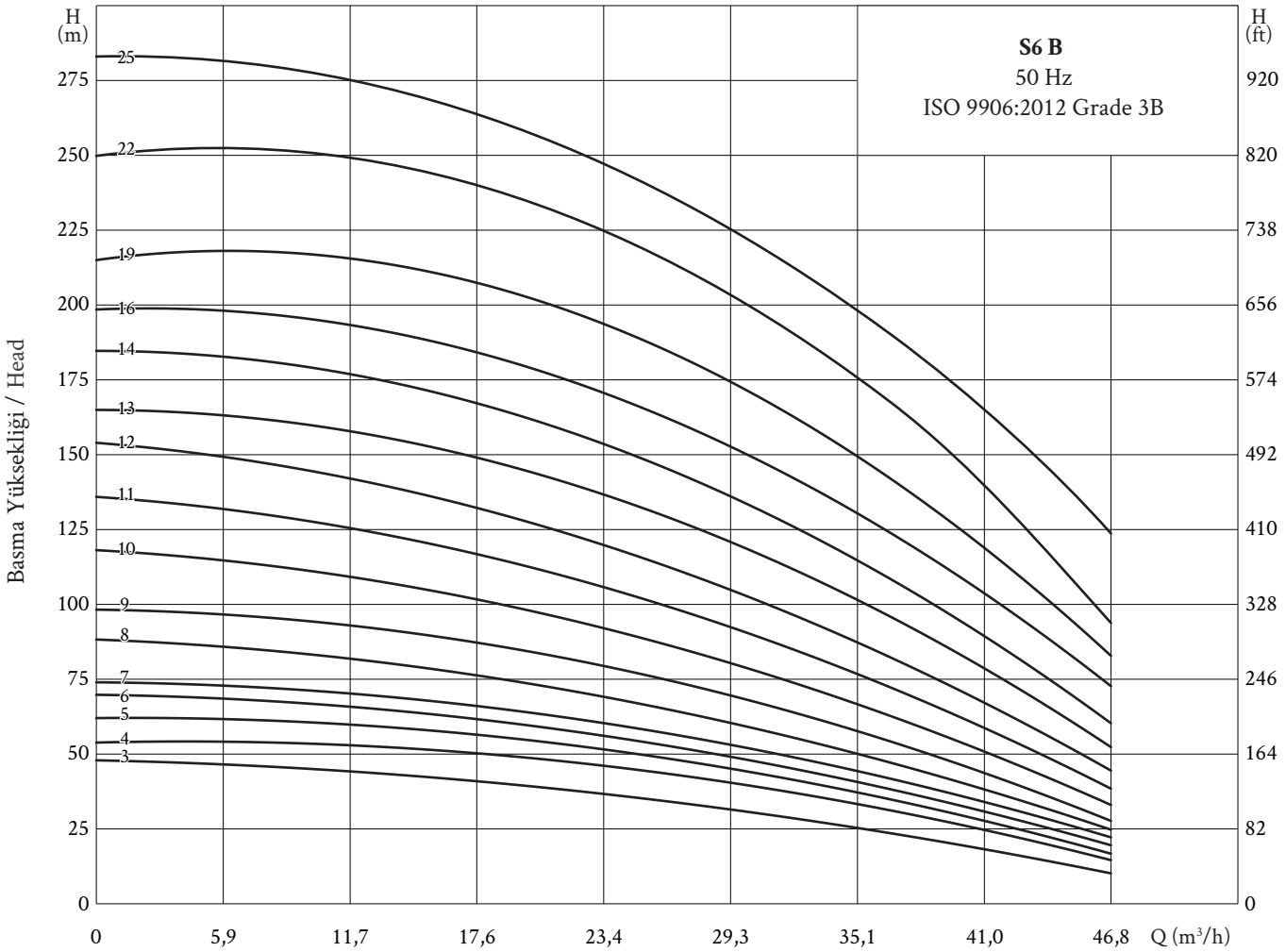

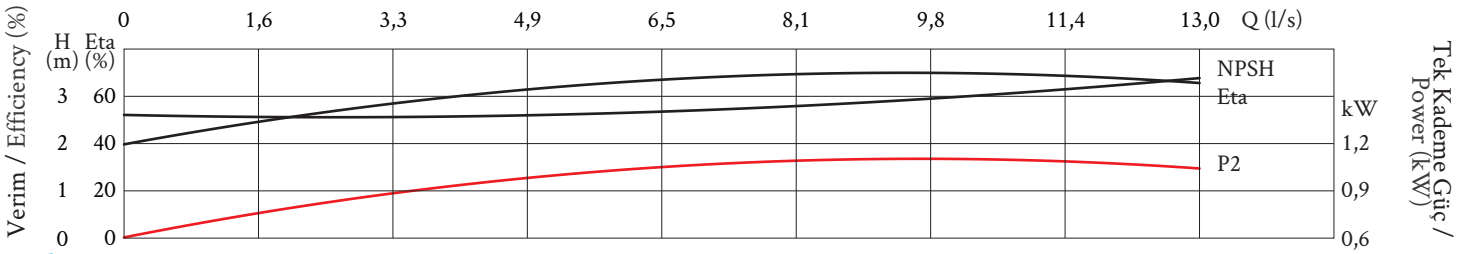

Pompa Tipi *Pump Type*	Motor			Kad. Sayısı *Stage No.*	Pompa Çıkışı *Pump Outlet*	Ø max *(mm)*	Basma Yüksekliği / *Head (m)*								
	Ø	HP	kW				0 *(l/s)*	7,0	10,0	12,0	14,0	15,0	16,0	17,0	18,0
							0 *(m³/h)*	25,2	36,0	43,2	50,4	54,0	57,6	61,2	64,8
S6 D 07/03	6”	7,5	5,5	3	3”-4”	150	41	37	33	30	27	26	24	22	20
S6 D 10/04	6”	10	7,5	4	3”-4”	150	54	50	45	42	38	35	32	30	27
S6 D 12/05	6”	12,5	9	5	3”-4”	150	69	62	56	52	47	44	41	38	34
S6 D 15/06	6”	15	11	6	3”-4”	150	80	73	67	62	56	52	49	46	42
S6 D 17/07	6”	17,5	13	7	3”-4”	150	93	84	78	72	66	64	60	56	52
S6 D 20/08	6”	20	15	8	3”-4”	150	102	95	88	82	77	73	69	64	60
S6 D 25/09	6”	25	18,5	9	3”-4”	150	112	104	98	90	84	80	76	72	67
S6 D 25/10	6”	25	18,5	10	3”-4”	150	126	118	110	104	97	92	86	80	74
S6 D 30/11	6”	30	22	11	3”-4”	150	141	131	124	116	108	102	96	89	82
S6 D 35/12	6”	35	26	12	3”-4”	150	152	142	134	127	118	112	105	98	90
S6 D 35/13	6”	35	26	13	3”-4”	150	166	157	146	136	126	120	114	106	98
S6 D 35/14	6”	35	26	14	3”-4”	150	176	165	155	147	136	130	123	115	107
S6 D 40/15	6”	40	30	15	3”-4”	150	192	178	166	156	144	138	132	124	114
S6 D 40/16	6”	40	30	16	3”-4”	150	202	186	174	164	153	147	140	132	124
S6 D 40/17	6”	40	30	17	3”-4”	150	212	196	184	172	161	155	148	140	131
S6 D 50/18	6”	50	37	18	3”-4”	150	220	206	190	178	168	158	154	146	138
S6 D 50/19	6”	50	37	19	3”-4”	150	228	214	198	188	176	168	162	154	144
S6 D 50/20	6”	50	37	20	3”-4”	150	236	224	206	195	184	176	176	162	152

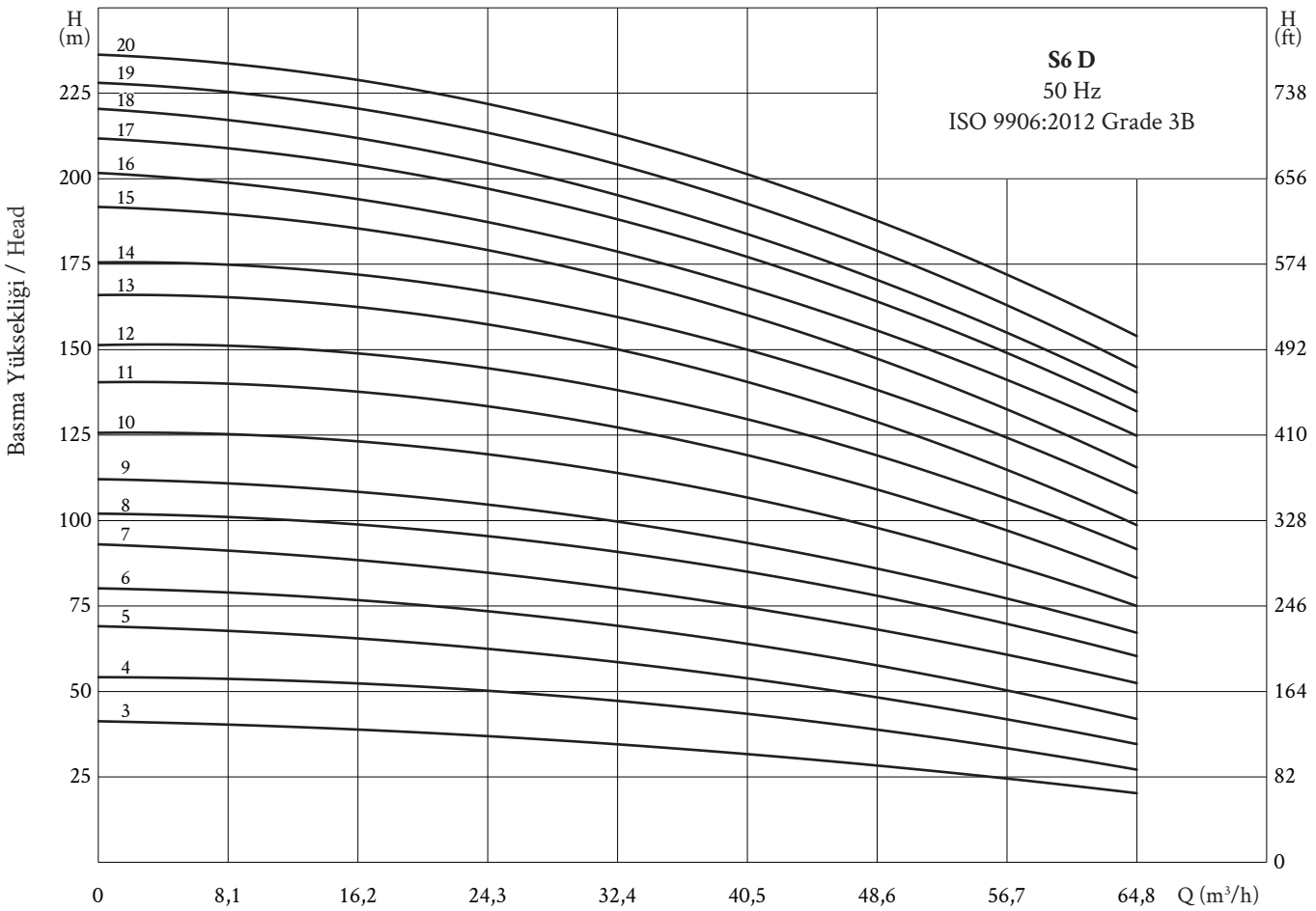

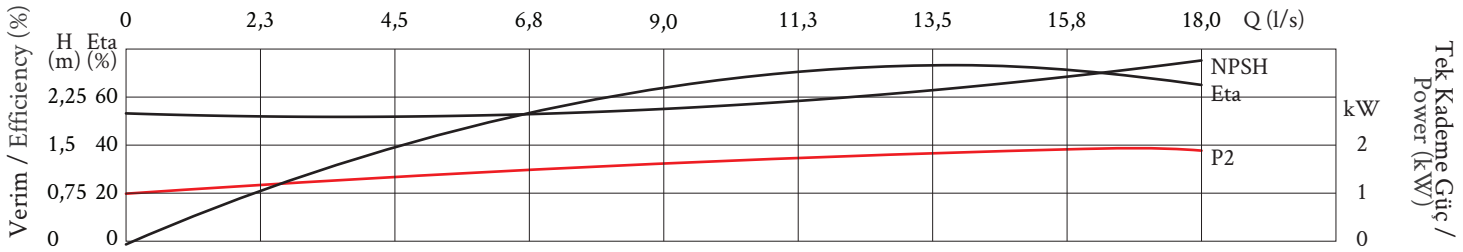

Pompa Tipi *Pump Type*	Motor			Kad. Sayısı *Stage No.*	Pompa Çıkışı *Pump Outlet*	Ø max *(mm)*	Basma Yüksekliği / *Head (m)*							
	Ø	HP	kW				Q *(l/s)*	5,0	10,0	15,0	20,0	22,0	25,0	27,0
							Q *(m³/h)*	18,0	36,0	54,0	72,0	79,2	90,0	97,2
S6 E 05/01	6”	5,5	4	1	4”	150	13	11	10	8	6	5	4	3
S6 E 07/02	6”	7,5	5,5	2	4”	150	26	23	21	17	14	11	9	6
S6 E 10/03	6”	10	7,5	3	4”	150	39	35	31	26	21	17	14	9
S6 E 15/04	6”	15	11	4	4”	150	52	47	41	34	28	23	19	12
S6 E 17/05	6”	17,5	13	5	4”	150	65	59	51	42	35	29	24	15
S6 E 20/06	6”	20	15	6	4”	150	78	71	61	50	41	35	29	18
S6 E 25/07	6”	25	18,5	7	4”	150	91	83	71	59	48	41	33	21
S6 E 30/08	6”	30	22	8	4”	150	104	95	81	67	55	47	38	24
S6 E 30/09	6”	30	22	9	4”	150	117	107	91	76	62	53	43	27
S6 E 35/10	6”	35	26	10	4”	150	130	119	101	85	69	59	47	30
S6 E 40/11	6”	40	30	11	4”	150	143	131	111	93	76	65	51	33
S6 E 40/12	6”	40	30	12	4”	150	156	143	121	101	83	71	56	36
S6 E 50/13	6”	50	37	13	4”	150	169	155	131	109	90	77	61	39
S6 E 50/14	6”	50	37	14	4”	150	182	167	141	117	97	83	65	42
S6 E 50/15	6”	50	37	15	4”	150	195	179	150	125	103	89	70	45

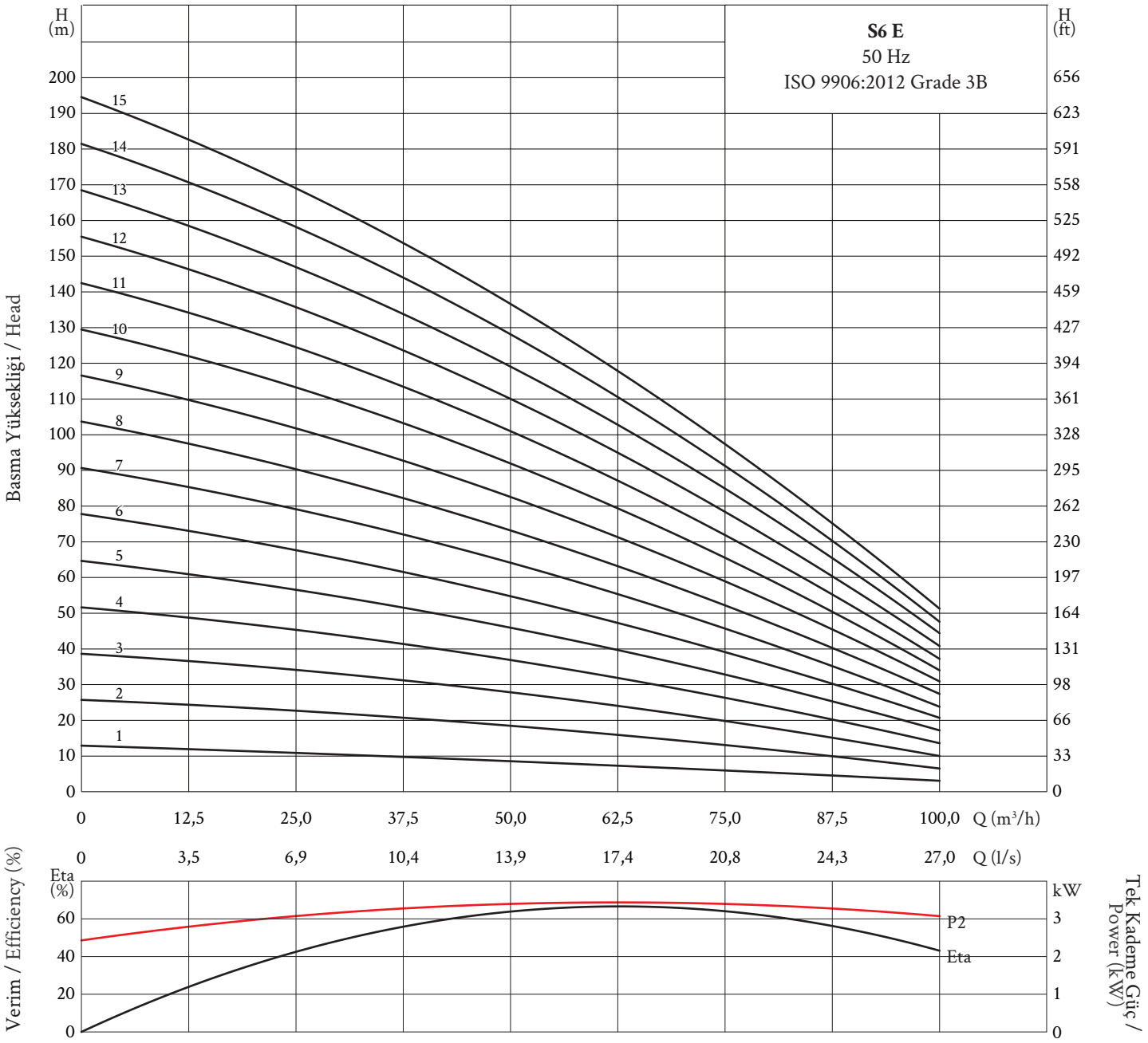

Pompa Tipi *Pump Type*	Motor			Kad. Sayısı *Stage No.*	Pompa Çıkışı *Pump Outlet*	Ø max *(mm)*	Basma Yüksekliği / *Head (m)*							
	Ø	HP	kW				0 *(l/s)*	5,0	10,0	15,0	20,0	25,0	30,0	35,0
							0 *(m³/h)*	18,0	36,0	54,0	72,0	90,0	108,0	126,0
S6 F 05/01	6”	5,5	4	1	4”	150	15	14	12	11	10	9	6	4
S6 F 10/02	6”	10	7,5	2	4”	150	30	28	26	22	20	16	11	8
S6 F 15/03	6”	15	11	3	4”	150	45	42	38	33	30	25	16	12
S6 F 20/04	6”	20	15	4	4”	150	60	55	50	44	40	32	21	16
S6 F 25/05	6”	25	18,5	5	4”	150	75	68	62	55	50	40	26	20
S6 F 30/06	6”	30	22	6	4”	150	90	81	74	65	60	48	31	24
S6 F 35/07	6”	35	26	7	4”	150	105	94	86	77	70	56	36	28
S6 F 40/08	6”	40	30	8	4”	150	120	107	98	87	80	64	41	32
S6 F 50/09	6”	50	37	9	4”	150	135	131	110	99	90	72	46	36
S6 F 50/10	6”	50	37	10	4”	150	150	143	122	110	100	80	51	40

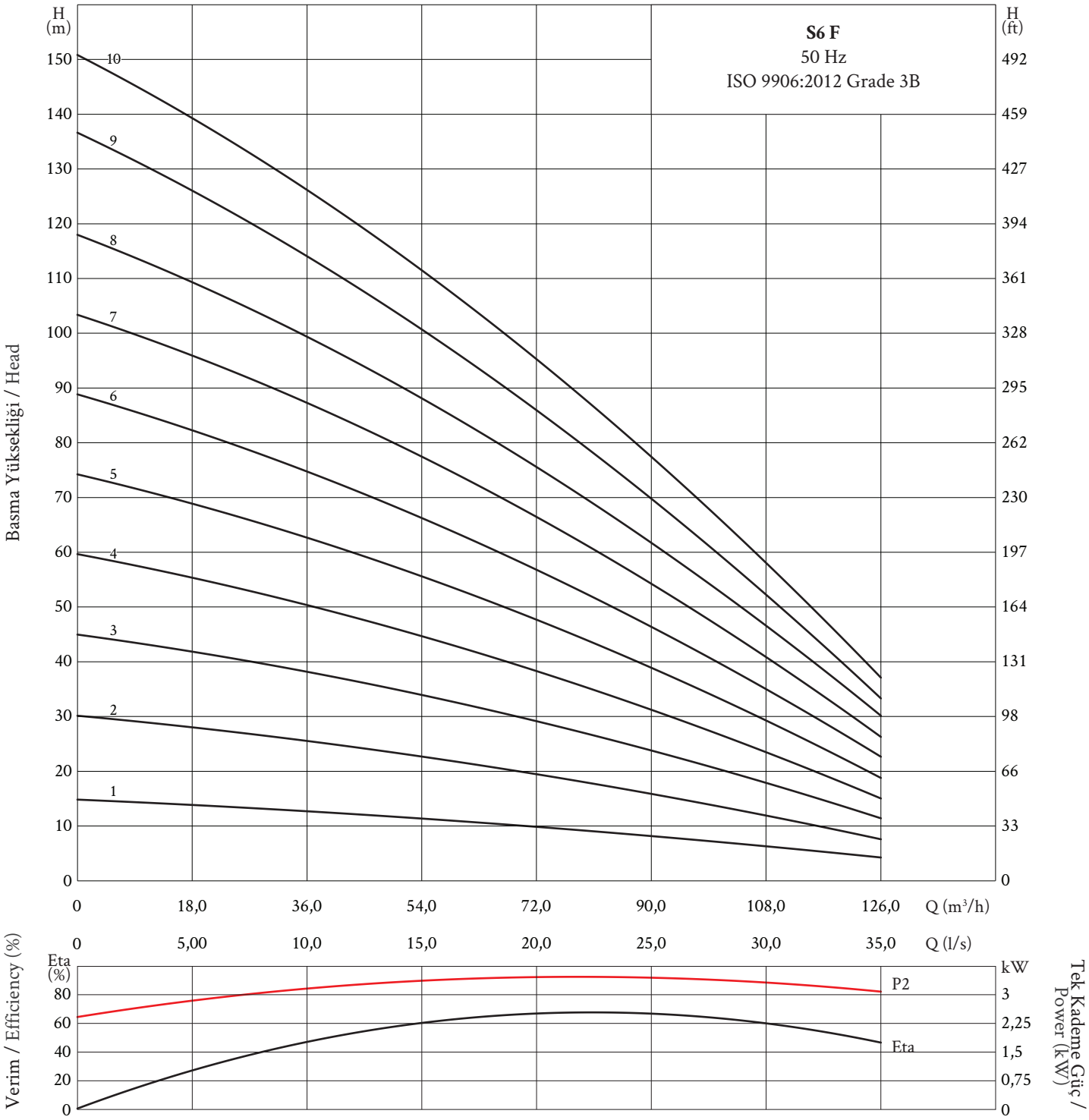

Pompa Tipi *Pump Type*	Motor			Kad. Sayısı *Stage No.*	Pompa Çıkışı *Pump Outlet*	Ø max *(mm)*	Basma Yüksekliği / *Head (m)*							
	Ø	HP	kW				0 *(l/s)*	5,0	10,0	15,0	20,0	25,0	30,0	35,0
							0 *(m³/h)*	18,0	36,0	54,0	72,0	90,0	108,0	126,0
S7 A 15/02	6”	15	11	2	4”-5”	180	46	45	42	39	35	25	15	8
S7 A 20/03	6”	20	15	3	4”-5”	180	70	65	60	55	49	37	24	9
S7 A 25/04	6”	25	18,5	4	4”-5”	180	86	85	83	78	68	54	35	13
S7 A 30/05	6”	30	22	5	4”-5”	180	109	106	105	96	85	70	50	29
S7 A 40/06	6”	40	30	6	4”-5”	180	130	125	120	115	104	88	68	39
S7 A 50/07	8”	50	37	7	4”-5”	193	156	150	140	130	118	96	73	40
S7 A 50/08	8”	50	37	8	4”-5”	193	169	168	160	147	127	105	77	43
S7 A 60/09	8”	60	45	9	4”-5”	193	193	190	180	167	150	125	90	48
S7 A 70/10	8”	70	52	10	4”-5”	193	215	208	195	180	163	135	99	50
S7 A 80/11	8”	80	60	11	4”-5”	193	239	235	226	210	190	160	121	56
S7 A 90/12	8”	90	67	12	4”-5”	193	260	258	247	230	207	175	128	62
S7 A 90/13	8”	90	67	13	4”-5”	193	280	279	270	250	224	183	135	75
S7 A 100/14	8”	100	75	14	4”-5”	193	305	295	280	260	230	190	144	80
S7 A 110/15	8”	110	81	15	4”-5”	193	318	312	296	275	250	212	160	88
S7 A 125/16	8”	125	92	16	4”-5”	193	337	332	318	296	270	235	188	98
S7 A 150/17	10”	150	110	17	4”-5”	240	360	355	340	320	290	258	214	124

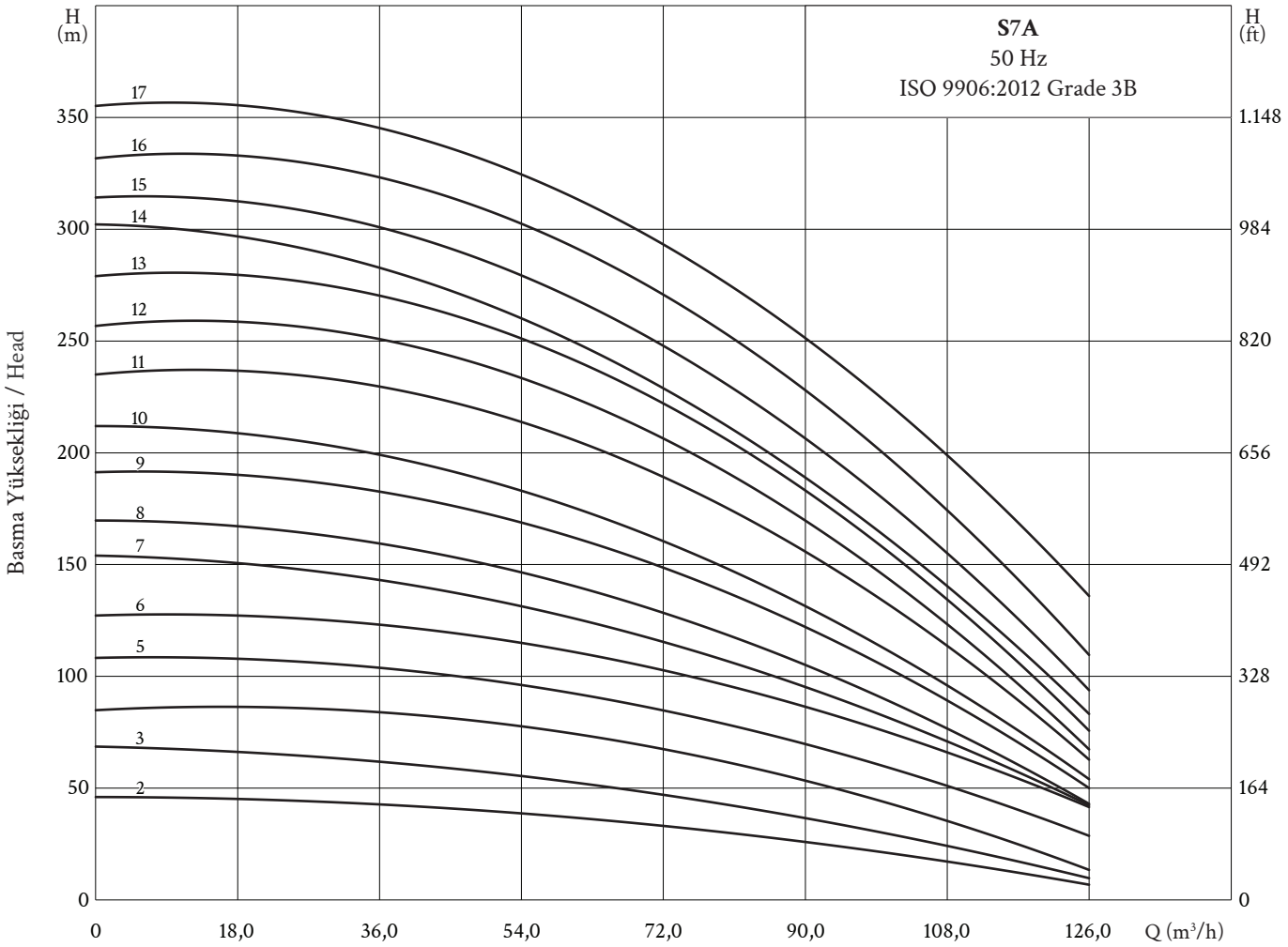

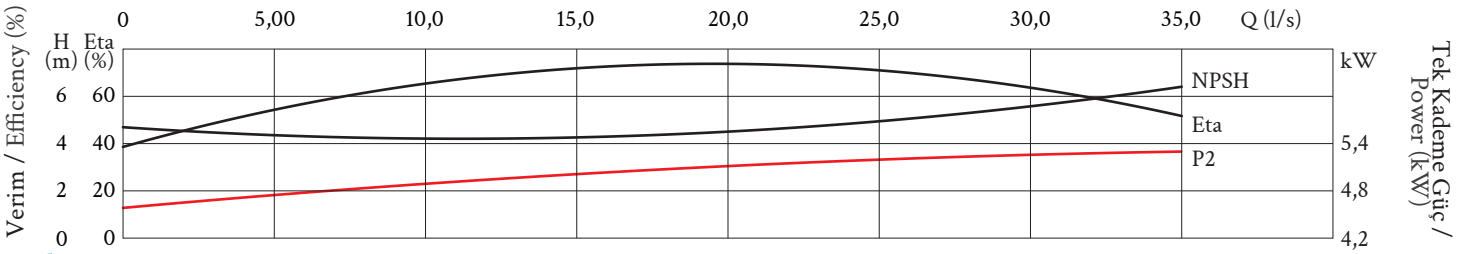

Pompa Tipi *Pump Type*	Motor			Kad. Sayısı *Stage No.*	Pompa Çıkışı *Pump Outlet*	Ø max *(mm)*	Basma Yüksekliği / *Head (m)*							
	Ø	HP	kW				0 *(l/s)*	15,0	20,0	25,0	30,0	33,0	35,0	40,0
							0 *(m³/h)*	54,0	72,0	90,0	108,0	118,8	126,0	144,0
S8 A 20/02	6”	20	15	2	5”	198	56	49	45	40	35	31	28	18
S8 A 30/03	6”	30	22	3	5”	198	84	73	67	60	52	46	41	27
S8 A 40/04	6”	40	30	4	5”	198	112	97	89	80	69	61	55	36
S8 A 50/05	8”	50	37	5	5”	198	140	122	111	100	87	77	69	45
S8 A 60/06	8”	60	45	6	5”	198	168	146	134	120	104	92	83	54
S8 A 70/07	8”	70	52	7	5”	198	196	170	156	140	121	108	97	63
S8 A 80/08	8”	80	60	8	5”	198	224	195	178	160	139	123	110	72
S8 A 90/09	8”	90	67	9	5”	198	252	219	200	180	156	138	124	81
S8 A 100/10	8”	100	75	10	5”	198	280	244	223	200	173	154	138	90
S8 A 110/11	8”	110	81	11	5”	198	308	268	245	220	191	169	152	99
S8 A 125/12	8”	125	92	12	5”	198	336	292	267	240	208	184	166	108
S8 A 125/13	8”	125	92	13	5”	198	364	317	290	260	225	200	179	117
S8 A 150/14	10”	150	110	14	5”	240	392	341	312	279	242	215	193	126
S8 A 150/15	10”	150	110	15	5”	240	420	365	334	299	260	230	207	135

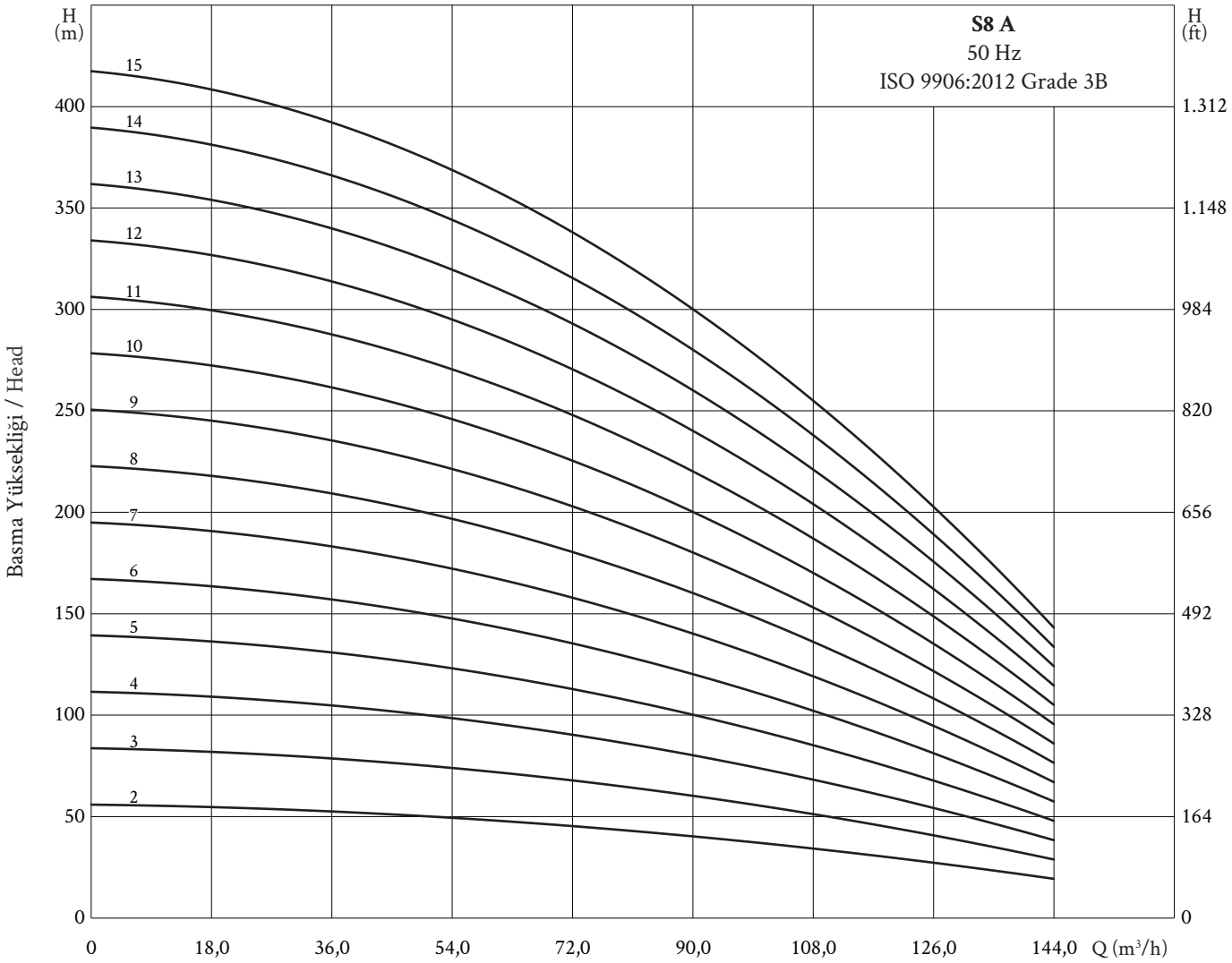

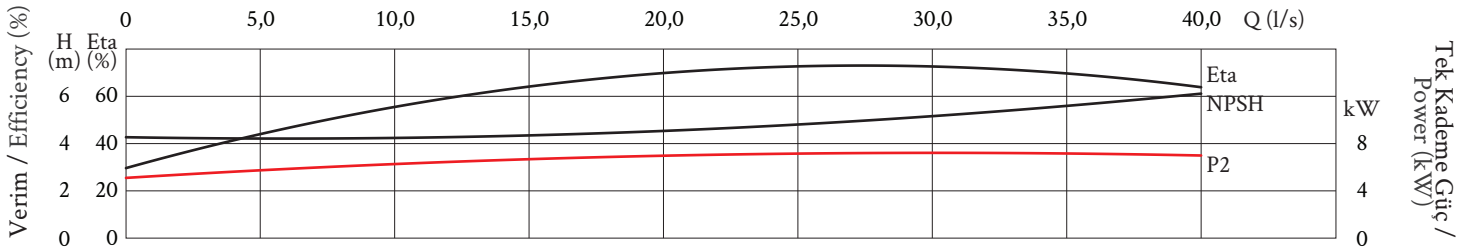

Pompa Tipi *Pump Type*	Motor			Kad. Sayısı *Stage No.*	Pompa Çıkışı *Pump Outlet*	Ø max *(mm)*	Basma Yüksekliği / *Head (m)*							
	Ø	HP	kW				0 *(l/s)*	15,0	20,0	25,0	30,0	35,0	40,0	45,0
							0 *(m³/h)*	54,0	72,0	90,0	108,0	126,0	144,0	162,0
S8 B 12/01	6”	12,5	9	1	5”	198	32	28	25	23	20	17	15	10
S8 B 20/02	6”	20	15	2	5”	198	51	47	44	42	37	33	29	20
S8 B 35/03	6”	35	26	3	5”	198	78	72	68	61	57	49	44	33
S8 B 50/04	8”	50	37	4	5”	198	104	97	91	84	77	68	60	48
S8 B 60/05	8”	60	45	5	5”	198	130	122	115	106	99	86	74	58
S8 B 70/06	8”	70	52	6	5”	198	157	144	136	124	118	100	86	68
S8 B 85/07	8”	85	63	7	5”	198	184	168	159	148	137	120	105	78
S8 B 100/08	8”	100	75	8	5”	198	207	196	182	168	153	136	117	98
S8 B 110/09	8”	110	81	9	5”	198	232	214	200	185	170	148	130	103
S8 B 125/10	8”	125	92	10	5”	198	254	232	215	205	188	160	142	109
S8 B 125/11	8”	125	92	11	5”	198	270	244	230	212	196	175	150	130
S8 B 150/12	10”	150	110	12	5”	240	292	262	248	230	211	190	166	140

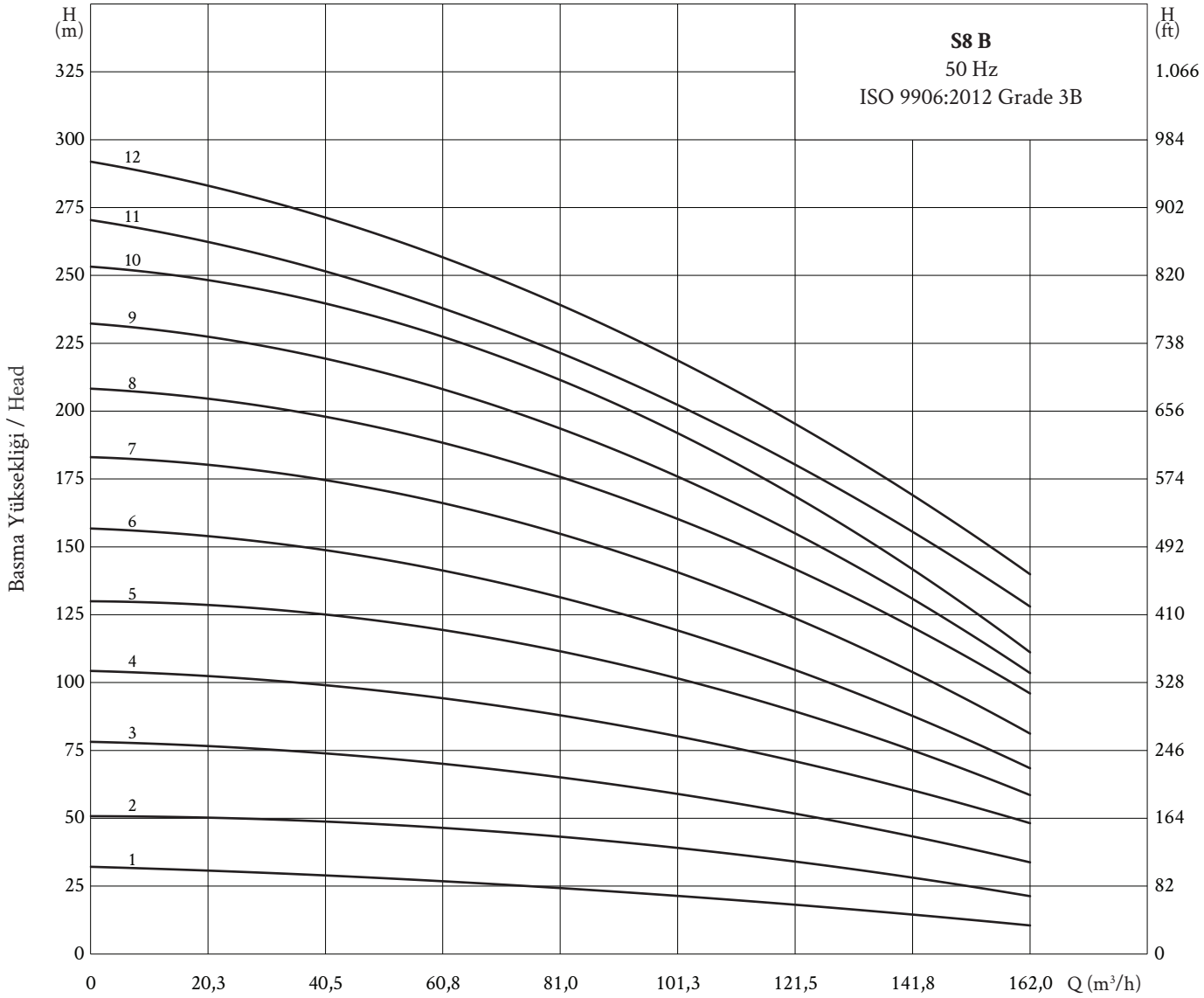

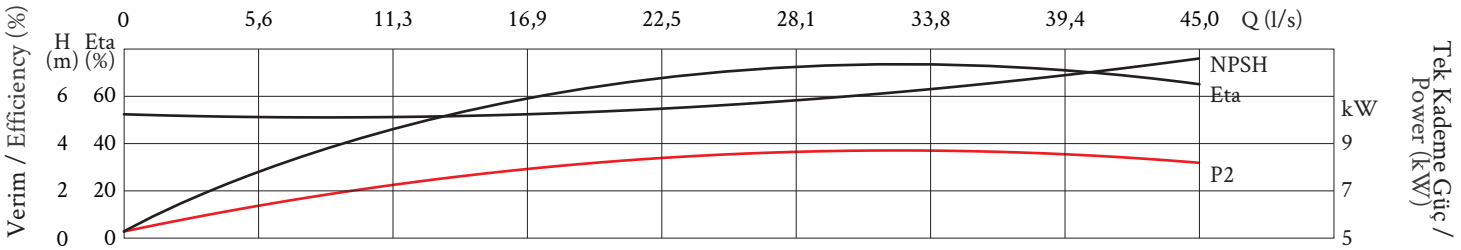

Pompa Tipi *Pump Type*	Motor			Kad. Sayısı *Stage No.*	Pompa Çıkışı *Pump Outlet*	Ø max *(mm)*	Basma Yüksekliği / *Head (m)*							
	Ø	HP	kW				0 *(l/s)*	20,0	30,0	35,0	40,0	45,0	50,0	55,0
							0 *(m³/h)*	72,0	108,0	126,0	144,0	162,0	180,0	198,0
S8 D 12/01	6”	12,5	9	1	5”	211	27	22	18	16	14	12	10	7
S8 D 20/02-1	6”	20	15	2	5”	211	45	41	37	34	30	27	25	16
S8 D 25/02	6”	25	18,5	2	5”	211	52	45	39	37	35	29	27	18
S8 D 30/03-1	6”	30	22	3	5”	211	73	61	55	53	48	41	34	20
S8 D 40/03	6”	40	30	3	5”	211	78	67	58	55	51	44	36	22
S8 D 50/04	8”	50	37	4	5”	211	105	86	78	75	65	61	47	25
S8 D 60/05	8”	60	45	5	5”	211	127	110	95	91	85	74	55	27
S8 D 75/06	8”	75	55	6	5”	211	152	120	107	102	98	88	69	35
S8 D 85/07	8”	85	63	7	5”	211	172	149	134	130	115	92	82	55
S8 D 100/08	8”	100	75	8	5”	211	201	169	152	144	126	112	86	62
S8 D 110/09	8”	110	81	9	5”	211	210	187	172	163	148	127	97	65
S8 D 125/10	8”	125	92	10	5”	211	230	208	191	177	161	140	114	78
S8 D 150/11	10”	150	110	11	5”	240	255	232	206	198	175	154	125	85
S8 D 150/12	10”	150	110	12	5”	240	263	255	226	210	187	168	135	98
S8 D 150/13	10”	150	110	13	5”	240	288	269	244	228	204	182	154	120

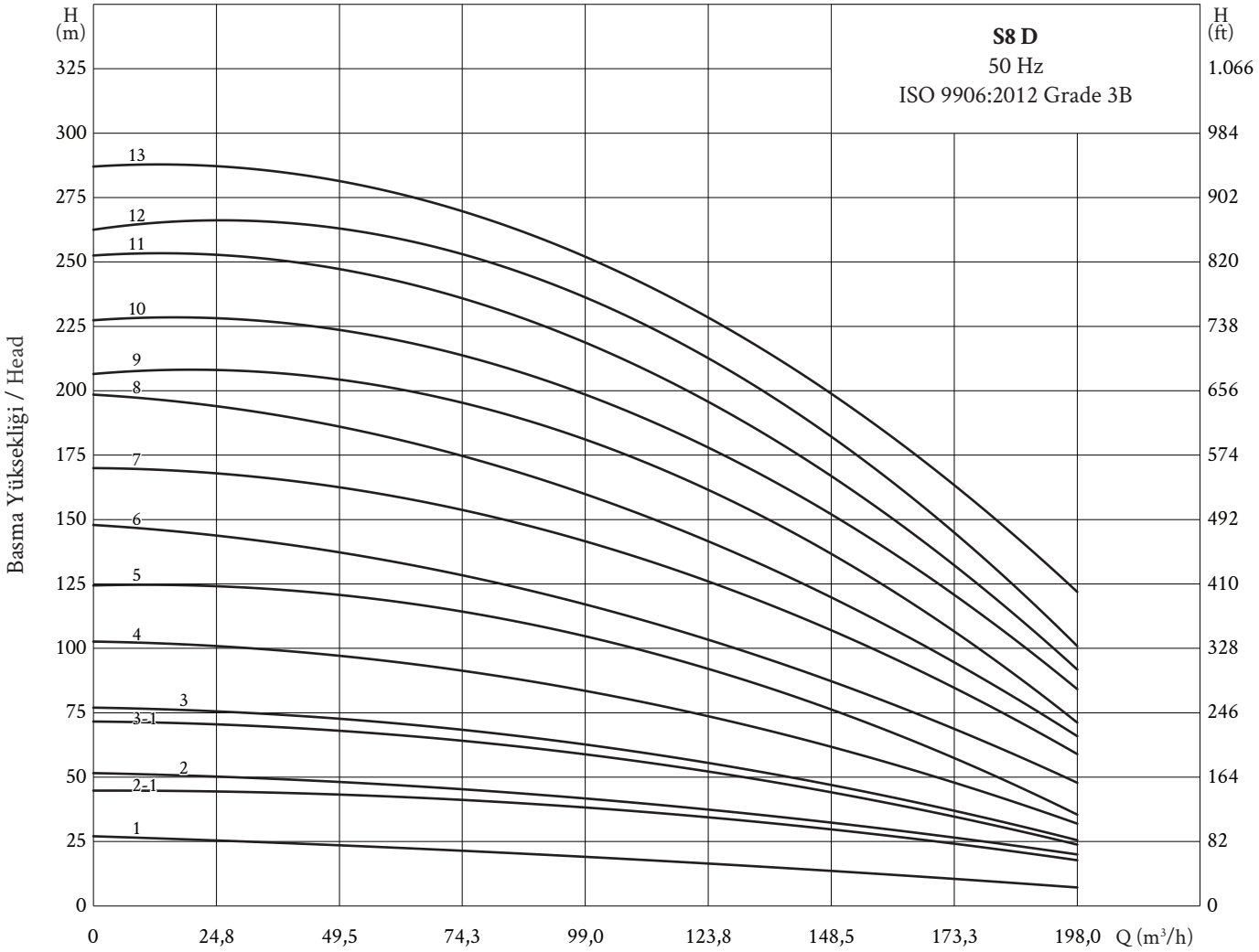

Pompa Tipi *Pump Type*	Motor Ø	Motor HP	Motor kW	Kad. Sayısı *Stage No.*	Pompa Çıkışı *Pump Outlet*	Ø max *(mm)*	Basma Yüksekliği / *Head (m)* 0 *(l/s)*	30,0	40,0	45,0	50,0	55,0	60,0	65,0	70,0
							0 *(m³/h)*	108,0	144,0	162,0	180,0	198,0	216,0	234,0	252,0
S10 A 30/01-1	6”	30	22	1	6”	240	38	31	27	26	25	24	23	21	19
S10 A 35/01	6”	35	26	1	6”	240	39	32	29	28	27	26	25	23	21
S10 A 50/02-1	8”	50	37	2	6”	240	71	57	52	49	47	42	40	36	32
S10 A 60/02	8”	60	45	2	6”	240	74	60	56	55	52	46	43	39	35
S10 A 60/03-2	8”	60	45	3	6”	240	90	80	73	69	66	62	57	50	45
S10 A 70/03-1	8”	70	52	3	6”	240	96	87	78	76	71	68	66	58	53
S10 A 80/03	8”	80	60	3	6”	240	110	93	85	81	78	73	68	62	56
S10 A 85/04-2	8”	85	63	4	6”	240	118	99	91	89	87	84	79	69	63
S10 A 90/04-1	8”	90	67	4	6”	240	130	110	104	98	95	89	81	74	66
S10 A 100/04	8”	100	75	4	6”	240	142	118	108	103	100	95	87	80	73
S10 A 125/05	8”	125	92	5	6”	240	162	135	120	114	110	103	97	90	81
S10 A 150/06-2	10”	150	110	6	6”	240	188	176	167	160	154	145	136	126	117

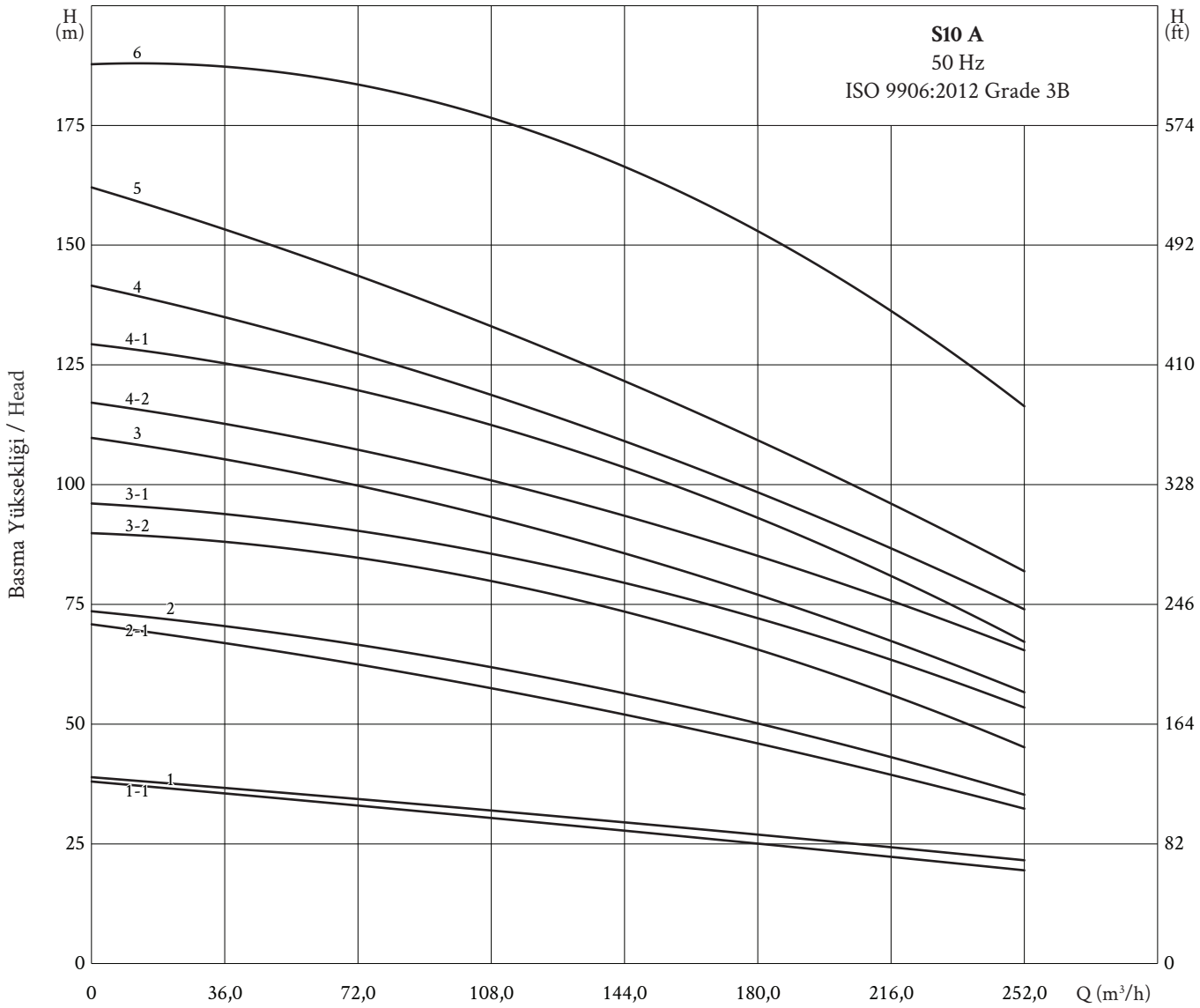

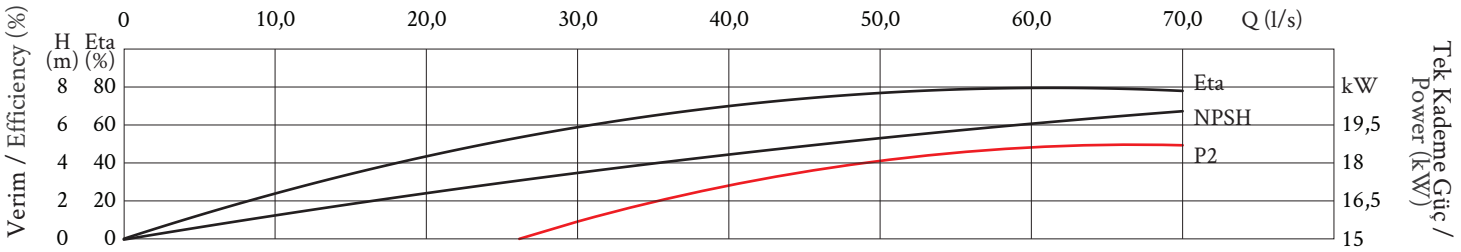

Pompa Tipi *Pump Type*	Motor			Kad. Sayısı *Stage No.*	Pompa Çıkışı *Pump Outlet*	Ø max *(mm)*	Basma Yüksekliği / *Head (m)*								
	Ø	HP	kW				0 *(l/s)*	13,9	27,8	41,7	55,6	69,4	83,3	97,2	111,1
							0 *(m³/h)*	50,0	100,0	150,0	200,0	250,0	300,0	350,0	400,0
S10 B 50/01	8”	50	37	1	6”	245	42	41	39	37	34	31	27	21	13
S10 B 100/02	8”	100	75	2	6”	245	84	83	79	75	69	62	55	43	26
S10 B 150/03	10”	150	110	3	6”	245	126	123	118	112	103	93	82	64	39
S10 B 200/04	10”	200	150	4	6”	245	168	164	157	149	137	124	109	85	52
S10 B 250/05	10”	250	185	5	6”	245	210	205	195	185	170	155	135	105	65

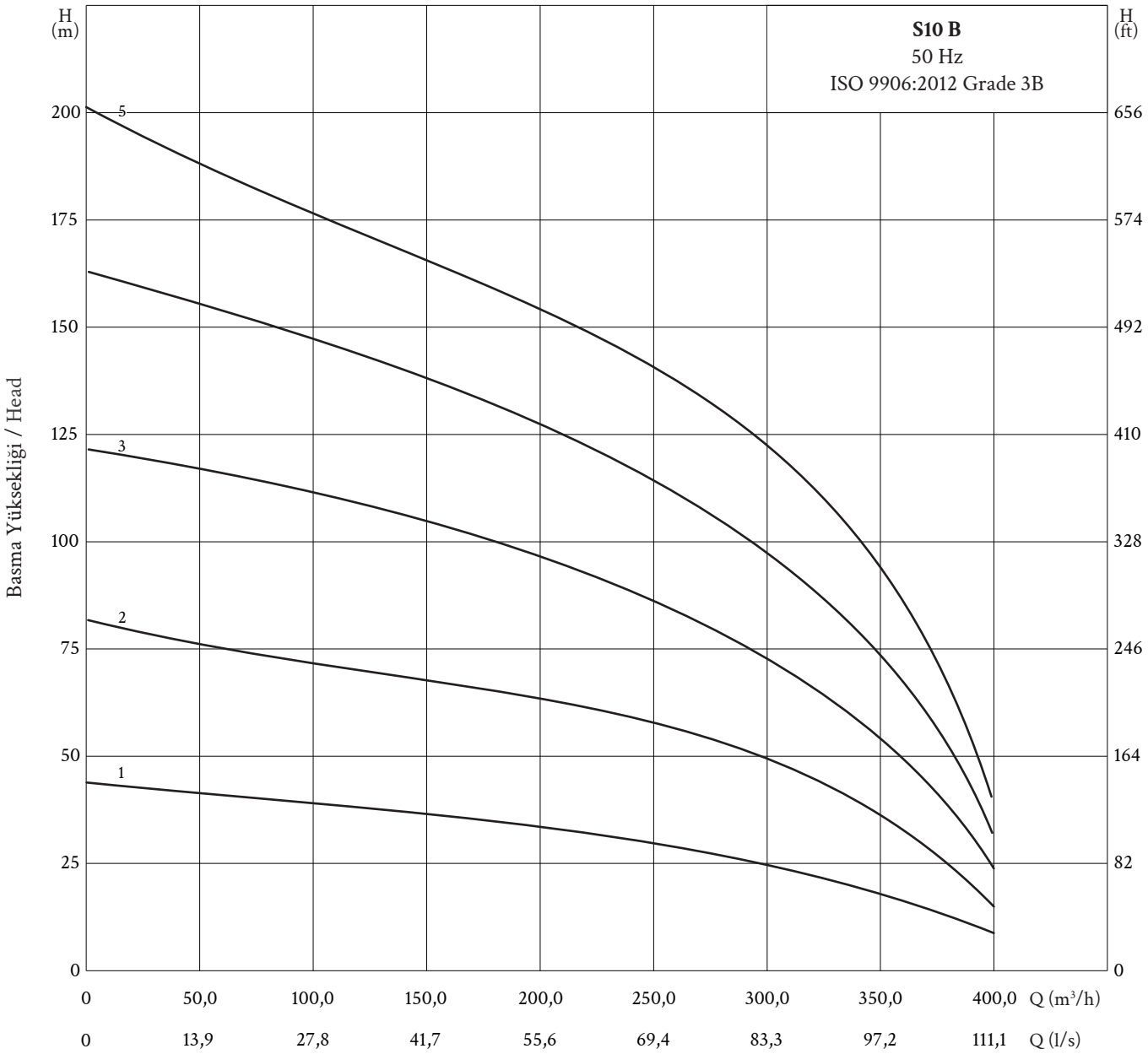

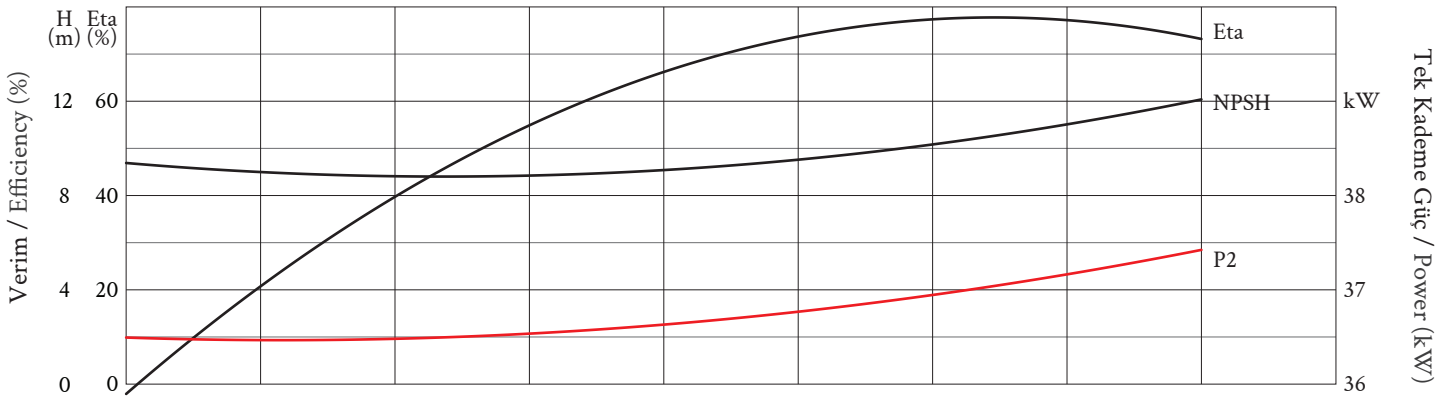

Pompa Tipi *Pump Type*	Motor			Kad. Sayısı *Stage No.*	Pompa Çıkışı *Pump Outlet*	Ø max *(mm)*	Basma Yüksekliği / *Head (m)*								
	Ø	HP	kW				0 *(l/s)*	22,2	44,40	66,7	88,9	111,1	122,2	133,3	144,4
							0 *(m³/h)*	80,0	160,0	240,0	320,0	400,0	440,0	480,0	520,0
S12 A 100/01	10”	100	75	1	6”	305	58	55	53	50	45	40	37	34	26
S12 A 150/02	10”	180	130	2	6”	305	107	100	93	85	77	70	66	62	54
S12 A 200/03	10”	250	185	3	6”	305	156	148	137	127	115	103	98	93	82
S12 A 250/04	10”	300	220	4	6”	305	213	200	180	160	145	134	127	120	107

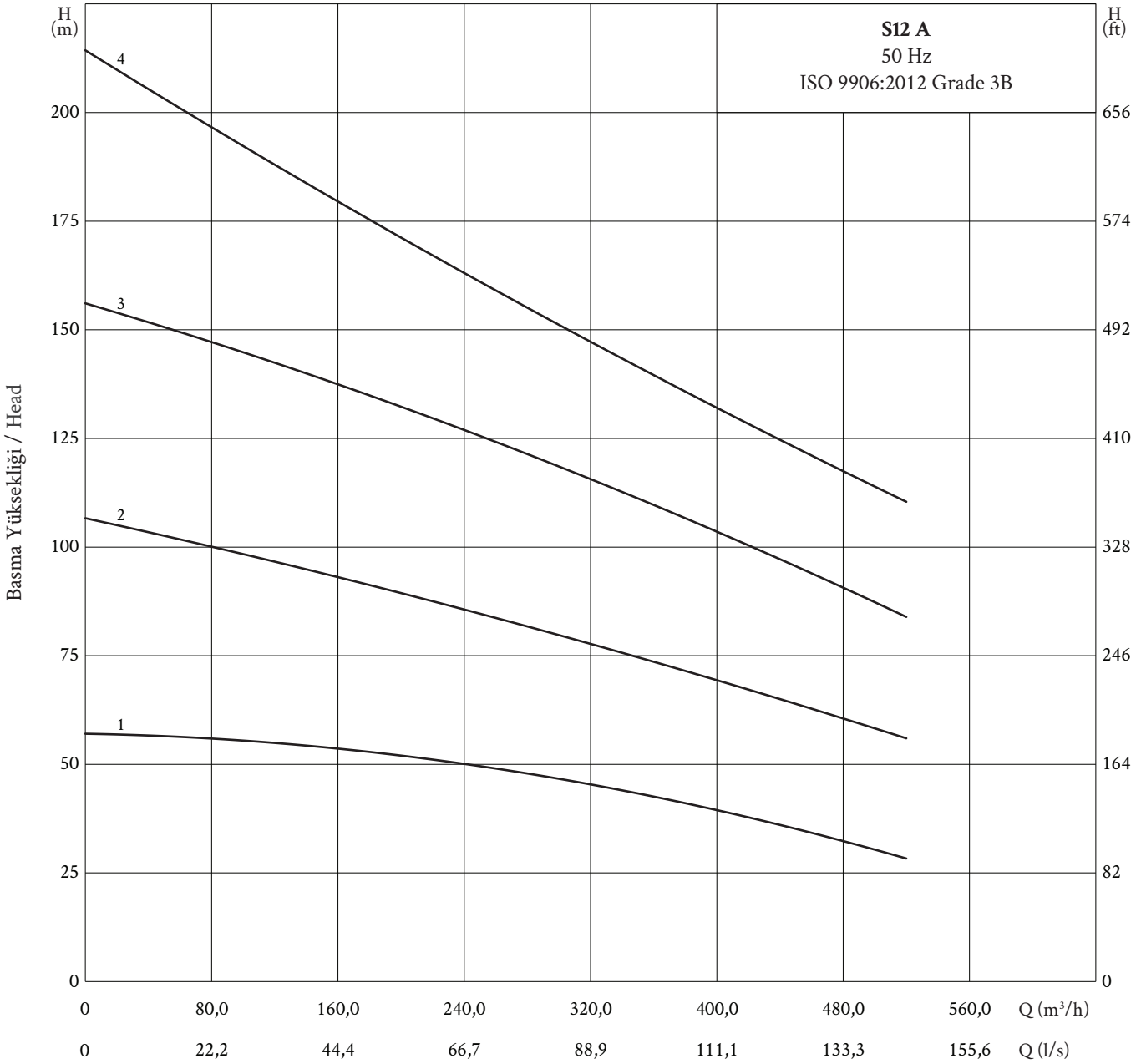

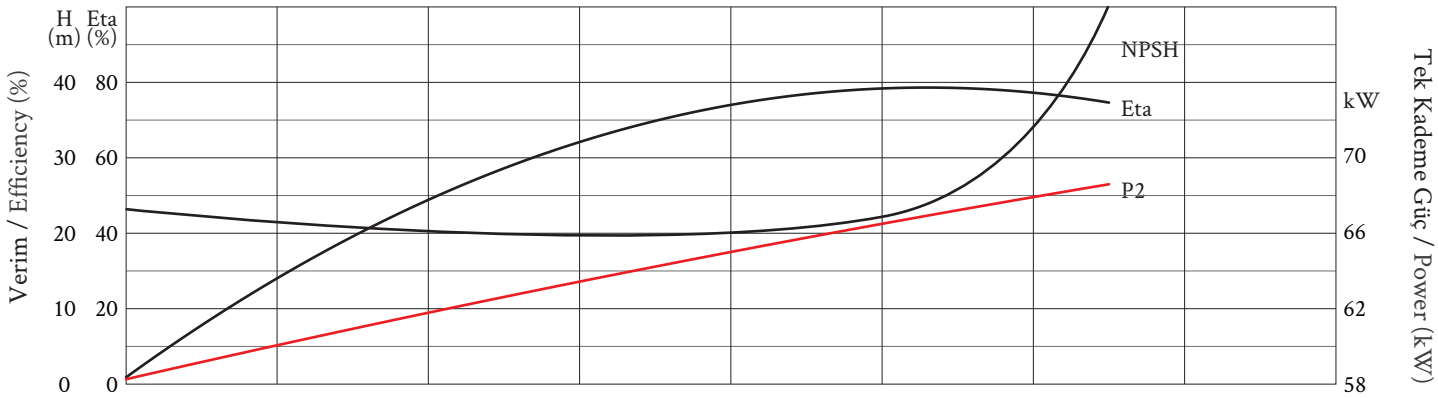

Pompa Tipi *Pump Type*	Motor Ø	Motor HP	Motor kW	Kad. Sayısı *Stage No.*	Pompa Çıkışı *Pump Outlet*	Ø max *(mm)*	Basma Yüksekliği / *Head (m)* 0 *(l/s)*	30,0	70,0	85,0	95,0	110,0	130,0	140,0	150,0
							0 *(m³/h)*	108,0	252,0	306,0	342,0	396,0	468,0	504,0	540,0
S12 B 110/01	10”	110	81	1	6”	305	59	58	57	55	53	50	45	40	33
S12 B 200/02	10”	200	150	2	6”	305	110	108	105	102	96	90	84	75	65
S12 B 300/03	10”	300	220	3	6”	305	170	165	158	150	142	130	118	105	92

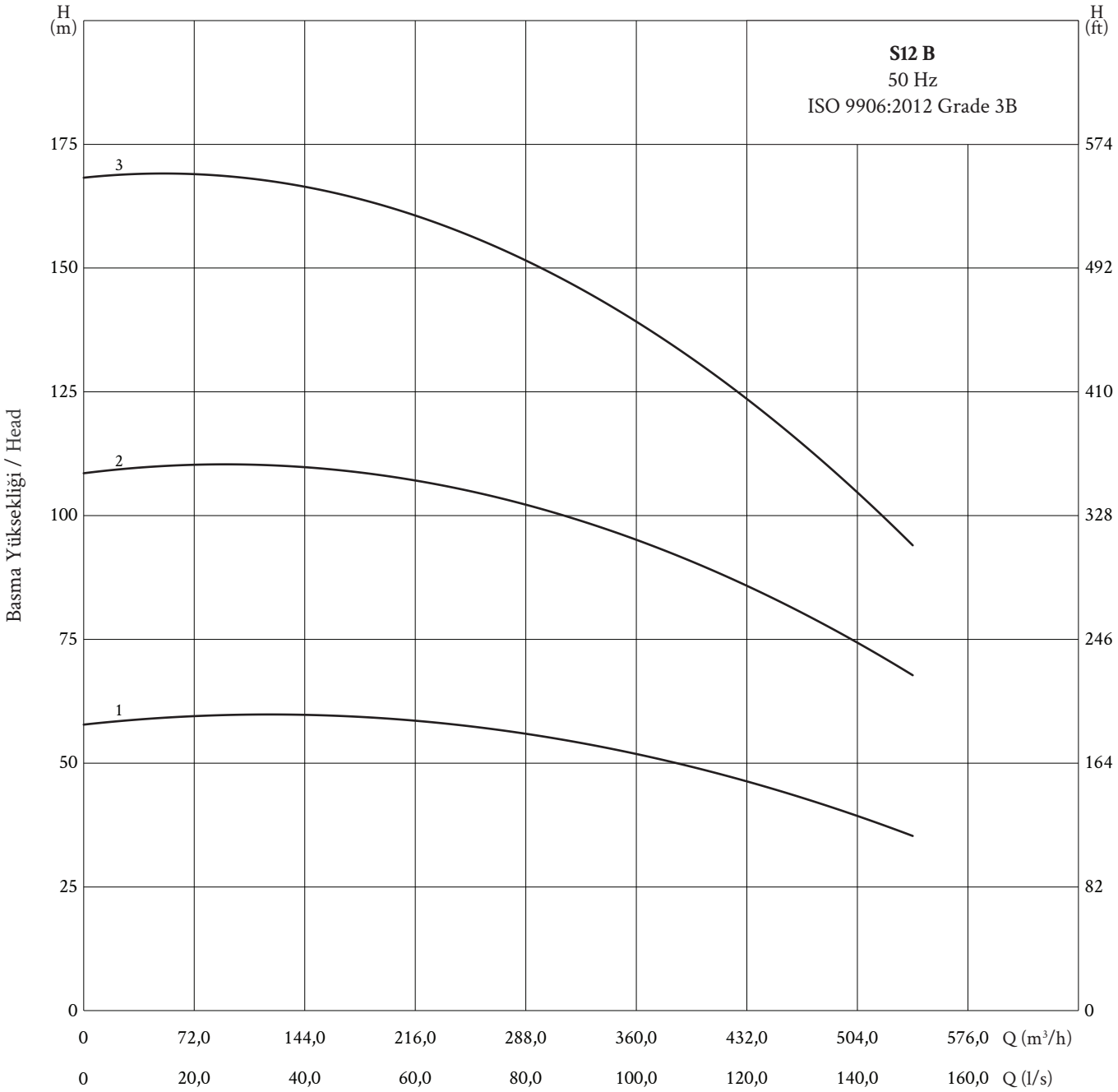

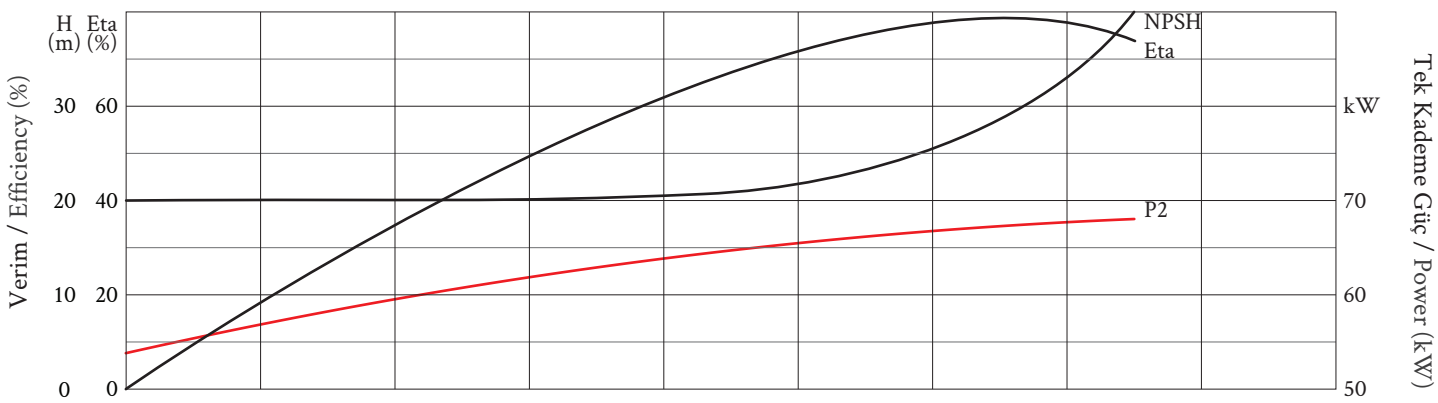

ÜSTÜNEL
Dalgıç Pompa-Submersible Pump

RADYAL DALGIÇ POMPA

RADIAL SUBMERSIBLE PUMPS

Kullanım Yerleri

Applications

Su Temini	*Raw Water Supply*
Sulama Sistemleri	*Irrigation Systems*
Zemin Suyu Alçaltma	*Groundwater lowering*
Basınçlandırma	*Pressure Boosting*
Endüstriyel Uygulamalar	*Industrial Applications*
Temiz, içinde lif ve katı maddeler bulunmayan, agresif sıvıların pompalanması	*Pumping of clean, thin and non-aggressive liquids without fibres or solid particules*

Çalışma Koşulları

Operating Conditions

Maksimum Sıvı Sıcaklığı	30°C	*Max. Liquid Temperature*	*30°C*
Maksimum Kum Miktarı	50 gr/m^3	*Max. Sand Content*	*50 gr/m^3*
Motor Koruma Sınıfı	IP68	*Motor Protection Class*	*IP68*
Maksimum Çalışma Sesi	70dB	*Max. Operation Sound*	*70dB*
Maksimum Kalkış Sayısı	20 (kalkış/saat)	*Max. Starting Number*	*20 (start/hour)*
Motor Dönüş Yönü	İki Yönlü	*Motor Rotation Direction*	*Bidirectional*

Pompa Çeşitleri

Pump Range

Tipi	Type	S6RD24A	S6RD36B
Çıkış Bağlantısı	*Outlet Connection*	3”	3”
Mil Çapı	*Shaft Diameter (mm)*	28	28
Su Verebilme Kapasitesi (m^3/h)	*Water Capacity (m^3/h)*	8-24	10-40
Emiş ve Çıkış: Pik Döküm (EN-GJL-250), Sfero Döküm (EN-GJS-500-7)	*Suction and Outlet: Cast Iron (EN-GJL-250), Ductile Cast Iron (EN-GJS-500-7)*	+	+
Kademe: Bronz (ASTMB145-4A)	*Stage: Bronze (ASTM B145-4A)*	+	+
Gövde: Çelik Döküm	*Body: Steel Casting*	+	+

Pompa Kodlaması

Identification Code

S6 RD 24 A 20 06

Pompa Çapı	*Pump Diameter*
Radyal	*Radial*
Nominal Debi	*Nominal Flow Rate*
Model	*Model Code*
Motor Gücü (HP)	*Motor Power (HP)*
Kademe Sayısı	*Stage Number*

Pompa Tipi *Pump Type*	Motor				Ölçüler / *Dimensions (mm)*					Toplam Ağırlık *Total Weight (kg)*
	Tipi *Type*	Çap	HP	kW	Boy / *Length*			Çap / *Dia*		
					A	B	C	D	E	
S6RD24A 10/02	S145MC/10	6”	10	7,5	1098	438	660	165	145	73
S6RD24A 10/03	S145MC/10	6”	10	7,5	1153	493	660	165	145	76
S6RD24A 15/04	S145MC/15	6”	15	11	1298	548	750	165	145	91
S6RD24A 15/05	S145MC/15	6”	15	11	1353	603	750	165	145	94
S6RD24A 20/06	S145MC/20	6”	20	15	1508	658	850	165	145	102
S6RD24A 20/07	S145MC/20	6”	20	15	1563	713	850	165	145	105
S6RD24A 25/08	S145MC/25	6”	25	18,5	1698	768	930	165	145	120
S6RD24A 25/09	S145MC/25	6”	25	18,5	1875	945	930	165	145	140
S6RD24A 30/10	S145MC/30	6”	30	22	2010	1000	1010	165	145	158
S6RD24A 35/11	S145MC/35	6”	35	26	2105	1055	1050	165	145	163
S6RD24A 35/12	S145MC/35	6”	35	26	2160	1110	1050	165	145	166
S6RD24A 40/13	S145MC/40	6”	40	30	2265	1165	1100	165	145	189
S6RD24A 40/14	S145MC/40	6”	40	30	2320	1220	1100	165	145	192
S6RD24A 40/15	S145MC/40	6”	40	30	2375	1275	1100	165	145	195
S6RD24A 40/16	S145MC/40	6”	40	30	2430	1330	1100	165	145	198
S6RD24A 50/17	S190MC/50	8”	50	37	2442	1452	990	165	193	219
S6RD24A 50/18	S190MC/50	8”	50	37	2675	1685	990	165	193	235
S6RD24A 60/19	S190MC/60	8”	60	45	2800	1740	1060	165	193	279
S6RD24A 60/20	S190MC/60	8”	60	45	2855	1795	1060	165	193	282
S6RD24A 60/21	S190MC/60	8”	60	45	2910	1850	1060	165	193	285
S6RD24A 60/22	S190MC/60	8”	60	45	2965	1905	1060	165	193	288
S6RD24A 70/23	S190MC/70	8”	70	52	3090	1960	1130	165	193	309
S6RD24A 75/24	S190MC/75	8”	75	55	3185	2015	1170	165	193	315
S6RD24A 75/25	S190MC/75	8”	75	55	3362	2192	1170	165	193	335
S6RD24A 75/26	S190MC/75	8”	75	55	3417	2247	1170	165	193	338
S6RD24A 80/27	S190MC/80	8”	80	60	3502	2302	1200	165	193	354
S6RD24A 85/28	S190MC/85	8”	85	63	3557	2357	1200	165	193	346
S6RD36B 10/02	S145MC/10	6”	10	7,5	1098	438	660	165	145	74
S6RD36B 15/03	S145MC/15	6”	15	11	1243	493	750	165	145	90
S6RD36B 15/04	S145MC/15	6”	15	11	1298	548	750	165	145	93
S6RD36B 20/05	S145MC/20	6”	20	15	1453	603	850	165	145	100
S6RD36B 25/06	S145MC/25	6”	25	18,5	1588	658	930	165	145	115
S6RD36B 25/07	S145MC/25	6”	25	18,5	1643	713	930	165	145	118
S6RD36B 30/08	S145MC/30	6”	30	22	1778	768	1010	165	145	139
S6RD36B 35/09	S145MC/35	6”	35	26	1995	945	1050	165	145	154
S6RD36B 40/10	S145MC/40	6”	40	30	2100	1000	1100	165	145	174
S6RD36B 40/11	S145MC/40	6”	40	30	2155	1055	1100	165	145	177
S6RD36B 40/12	S145MC/40	6”	40	30	2210	1110	1100	165	145	180
S6RD36B 50/13	S190MC/50	8”	50	37	2155	1165	990	165	193	188
S6RD36B 50/14	S190MC/50	8”	50	37	2210	1220	990	165	193	191
S6RD36B 60/15	S190MC/60	8”	60	45	2458	1398	1060	165	193	247
S6RD36B 60/16	S190MC/60	8”	60	45	2513	1453	1060	165	193	250
S6RD36B 75/17	S190MC/75	8”	75	55	2800	1630	1170	165	193	277
S6RD36B 75/18	S190MC/75	8”	75	55	2855	1685	1170	165	193	296
S6RD36B 80/19	S190MC/80	8”	80	60	2940	1740	1200	165	193	314
S6RD36B 80/20	S190MC/80	8”	80	60	2995	1795	1200	165	193	317
S6RD36B 90/21	S190MC/90	8”	90	67	3150	1850	1300	165	193	325
S6RD36B 90/22	S190MC/90	8”	90	67	3205	1905	1300	165	193	328
S6RD36B 100/23	S190MC/100	8”	100	75	3310	1960	1350	165	193	333
S6RD36B 100/24	S190MC/100	8”	100	75	3365	2015	1350	165	193	336
S6RD36B 110/25	S190MC/110	8”	110	81	3542	2192	1350	165	193	339

Pompa Tipi *Pump Type*	Motor			Kad. Sayısı *Stage No.*	Pompa Çıkışı *Pump Outlet*	Ø max *(mm)*	Basma Yüksekliği / *Head (m)*						
	Çap	HP	kW				0 *(l/s)*	2,2	3,3	4,4	5,6	6,7	7,8
							0 *(m³/h)*	8,0	12,0	16,0	20,0	24,0	28,0
S6RD24A 10/02	6”	10	7,5	2	3”	165	51	50	49	46	43	40	35
S6RD24A 10/03	6”	10	7,5	3	3”	165	78	76	75	73	70	66	59
S6RD24A 15/04	6”	15	11	4	3”	165	94	92	91	90	87	80	72
S6RD24A 15/05	6”	15	11	5	3”	165	111	109	108	103	100	90	85
S6RD24A 20/06	6”	20	15	6	3”	165	127	124	122	120	112	104	96
S6RD24A 20/07	6”	20	15	7	3”	165	141	140	141	134	128	120	110
S6RD24A 25/08	6”	25	18,5	8	3”	165	163	161	160	156	145	133	121
S6RD24A 25/09	6”	25	18,5	9	3”	165	188	182	180	175	162	146	130
S6RD24A 30/10	6”	30	22	10	3”	165	208	207	202	199	189	171	152
S6RD24A 35/11	6”	35	26	11	3”	165	229	227	225	220	211	197	179
S6RD24A 35/12	6”	35	26	12	3”	165	251	250	248	242	234	220	200
S6RD24A 40/13	6”	40	30	13	3”	165	271	268	266	260	250	236	219
S6RD24A 40/14	6”	40	30	14	3”	165	289	285	280	278	270	254	230
S6RD24A 40/15	6”	40	30	15	3”	165	310	307	302	297	286	268	242
S6RD24A 40/16	6”	40	30	16	3”	165	331	328	322	317	305	285	260
S6RD24A 50/17	8”	50	37	17	3”	193	351	342	340	331	320	304	279
S6RD24A 50/18	8”	50	37	18	3”	193	381	377	370	363	347	325	294
S6RD24A 60/19	8”	60	45	19	3”	193	402	399	392	386	371	345	313
S6RD24A 60/20	8”	60	45	20	3”	193	423	420	412	400	381	360	330
S6RD24A 60/21	8”	60	45	21	3”	193	441	433	428	415	400	380	346
S6RD24A 60/22	8”	60	45	22	3”	193	467	454	447	438	420	392	360
S6RD24A 70/23	8”	70	52	23	3”	193	492	482	474	461	441	420	388
S6RD24A 75/24	8”	75	55	24	3”	193	521	514	504	489	469	441	412
S6RD24A 75/25	8”	75	55	25	3”	193	551	543	532	518	496	470	436
S6RD24A 75/26	8”	75	55	26	3”	193	573	568	557	540	517	490	458
S6RD24A 80/27	8”	80	60	27	3”	193	594	588	578	560	538	510	471
S6RD24A 85/28	8”	85	63	28	3”	193	618	610	600	582	561	531	493

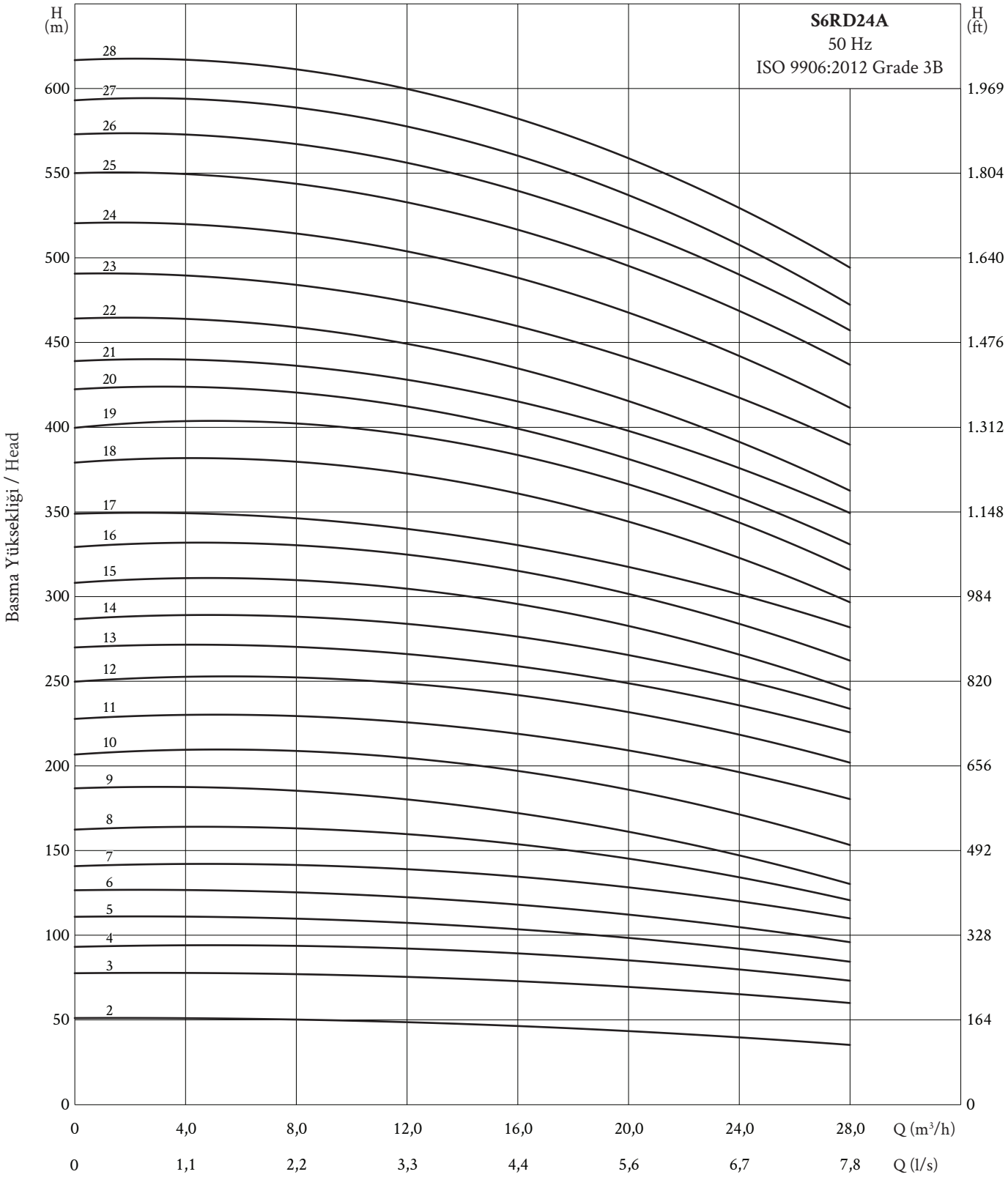

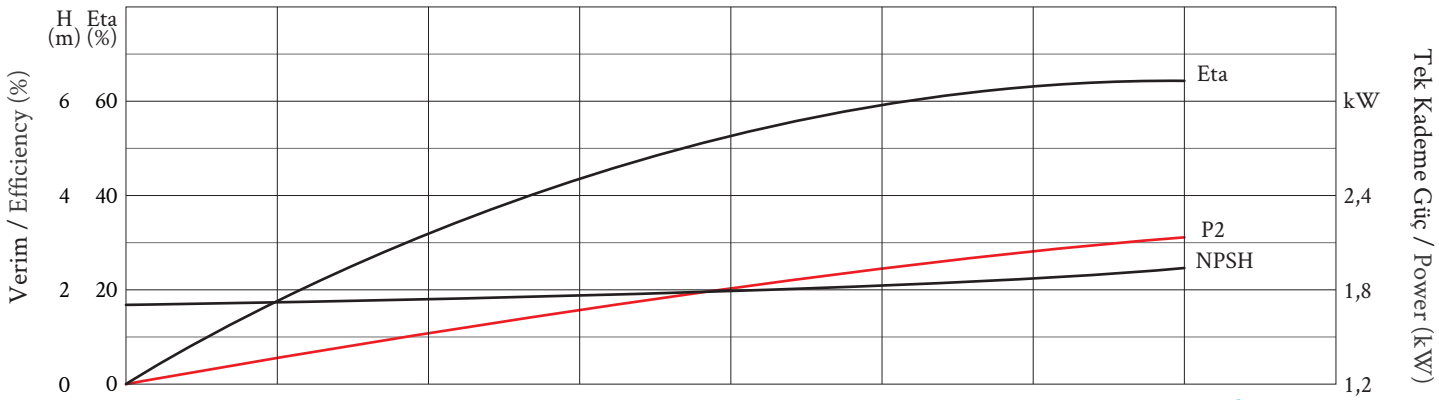

Pompa Tipi *Pump Type*	Motor			Kad. Sayısı *Stage No.*	Pompa Çıkışı *Pump Outlet*	Ø max *(mm)*	Basma Yüksekliği / *Head (m)*					
	Çap	HP	kW				0 *(l/s)*	2,8	5,6	8,3	11,1	13,9
							0 *(m³/h)*	10,0	20,0	30,0	40,0	50,0
S6RD36B 10/02	6”	10	7,5	2	3”	165	55	54	51	44	36	18
S6RD36B 15/03	6”	15	11	3	3”	165	72	69	65	58	45	29
S6RD36B 15/04	6”	15	11	4	3”	165	93	92	87	76	62	43
S6RD36B 20/05	6”	20	15	5	3”	165	112	107	100	87	74	47
S6RD36B 25/06	6”	25	18,5	6	3”	165	126	122	115	100	81	61
S6RD36B 25/07	6”	25	18,5	7	3”	165	139	137	128	112	92	68
S6RD36B 30/08	6”	30	22	8	3”	165	156	152	143	129	106	80
S6RD36B 35/09	6”	35	26	9	3”	165	175	175	162	144	122	93
S6RD36B 40/10	6”	40	30	10	3”	165	194	193	186	168	142	104
S6RD36B 40/11	6”	40	30	11	3”	165	213	212	208	193	162	112
S6RD36B 40/12	6”	40	30	12	3”	165	236	231	225	211	175	118
S6RD36B 50/13	8”	50	37	13	3”	193	263	259	250	227	187	131
S6RD36B 50/14	8”	50	37	14	3”	193	287	281	268	243	199	137
S6RD36B 60/15	8”	60	45	15	3”	193	307	304	290	262	217	145
S6RD36B 60/16	8”	60	45	16	3”	193	326	320	306	281	232	158
S6RD36B 75/17	8”	75	55	17	3”	193	347	341	327	303	244	168
S6RD36B 75/18	8”	75	55	18	3”	193	362	358	342	317	262	181
S6RD36B 80/19	8”	80	60	19	3”	193	387	383	368	337	281	190
S6RD36B 80/20	8”	80	60	20	3”	193	413	409	393	362	305	207
S6RD36B 90/21	8”	90	67	21	3”	193	437	434	416	384	319	219
S6RD36B 90/22	8”	90	67	22	3”	193	468	462	443	407	340	237
S6RD36B 100/23	8”	100	75	23	3”	193	490	487	468	428	356	249
S6RD36B 100/24	8”	100	75	24	3”	193	512	508	487	451	376	261
S6RD36B 110/25	8”	110	81	25	3”	193	537	529	506	468	389	268

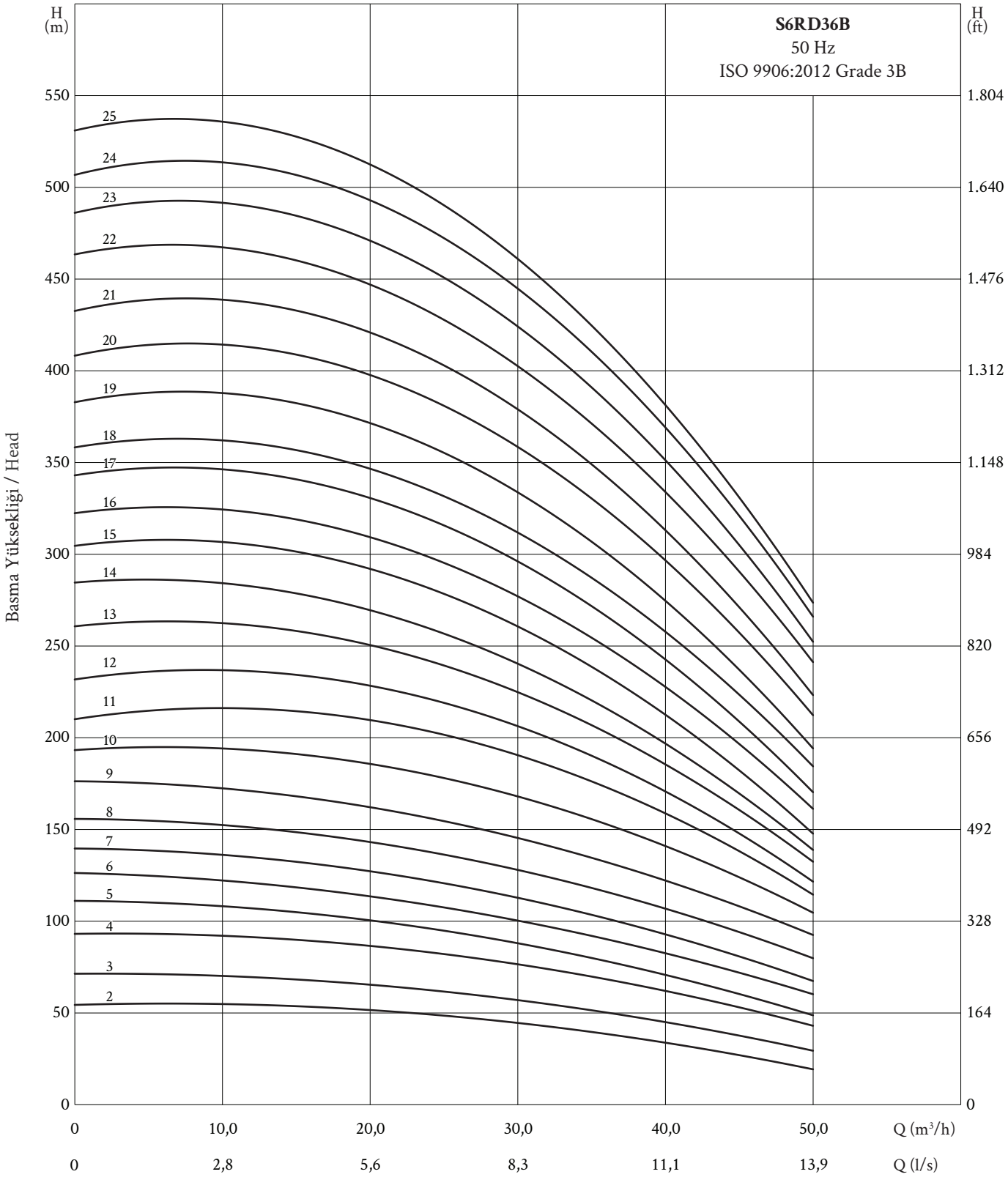

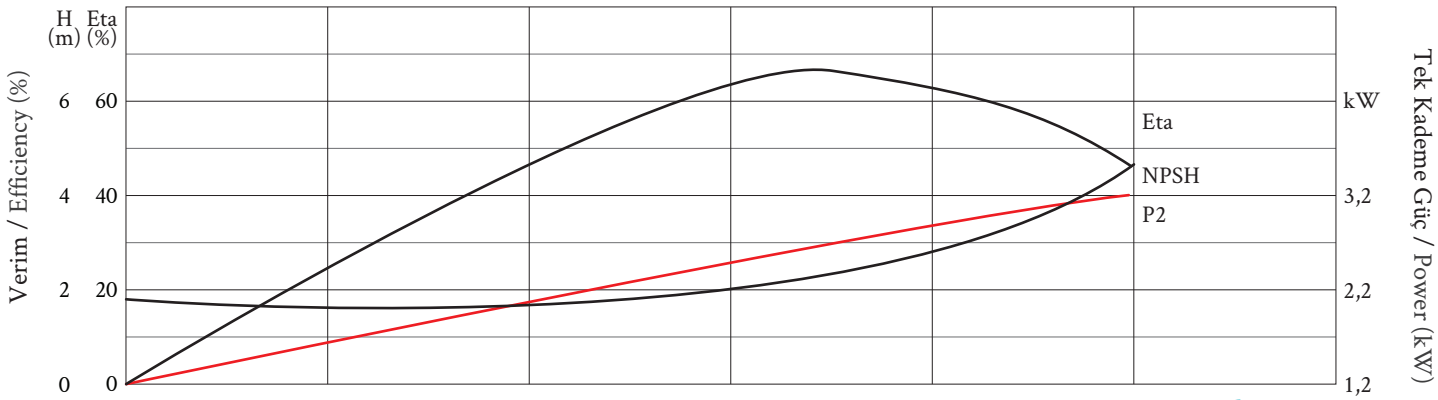

ÜSTÜNEL
Dalgıç Pompa-Submersible Pump

PASLANMAZ DALGIÇ POMPA

STAINLESS STEEL SUBMERSIBLE PUMPS

Kullanım Yerleri / *Applications*

Su Temini	*Raw Water Supply*
Sulama Sistemleri	*Irrigation Systems*
Zemin Suyu Alçaltma	*Groundwater lowering*
Basınçlandırma	*Pressure Boosting*
Endüstriyel Uygulamalar	*Industrial Applications*
Temiz, içinde lif ve katı maddeler bulunmayan, agresif sıvıların pompalanması	*Pumping of clean, thin and non-aggressive liquids without fibres or solid particules*

Çalışma Koşulları / *Operating Conditions*

Maksimum Sıvı Sıcaklığı	50°C	*Max. Liquid Temperature*	*50°C*
Maksimum Kum Miktarı	50 gr/m^3	*Max. Sand Content*	*50 gr/m^3*
Motor Koruma Sınıfı	IP68	*Motor Protection Class*	*IP68*
Maksimum Çalışma Sesi	70dB	*Max. Operation Sound*	*70dB*
Maksimum Kalkış Sayısı	20 (kalkış/saat)	*Max. Starting Number*	*20 (start/hour)*
Motor Dönüş Yönü	İki Yönlü	*Motor Rotation Direction*	*Bidirectional*

Pompa Çeşitleri / *Pump Range*

Tipi / Type	S4CR5C	S4CR8D	S4CR14E	S6CR10L	S6CR17A	S6CR24M	S6CR30B	S6CR46C	S6CR60D	S6CR90K	S7CR77E	S7CR95F	S7CR105L	S8CR135G	S8CR160H	S10CR200I	S10CR250I
Çıkış Bağlantısı / *Outlet Connection*	1,5"	2"	2"	3"	3"	3"	3"	3-4"	3-4"	4"	5"	5"	5"	6"	6"	6"	6"
Mil Çapı / *Shaft Diameter (mm)*	13	13	13	20	20	22	22	22	22	25	25	25	25	30	30	30	30
Su Verebilme Kapasitesi (m^3/h) / *Water Capacity (m^3/h)*	5	8	14	10	17	24	30	46	60	90	77	95	105	135	160	200	250
Emiş ve Çıkış: Paslanmaz Çelik / *Suction and Outlet: Stainless Steel*	+	+	+	+	+	+	+	+	+	+	+	+	+	+	+	+	+
Kademe ve Fan: Paslanmaz Çelik DIN 1.4301 AISI 304 / *Stage and impeller: Stainless Steel DIN 1.4301 AISI 304*	+	+	+	+	+	+	+	+	+	+	+	+	+	+	+	+	+
Kademe ve Fan: Paslanmaz Çelik DIN 1.4401 AISI 316 / *Stage and impeller: Stainless Steel DIN 1.4401 AISI 316*	+	+	+	+	+	+	+	+	+	+	+	+	+	+	+	+	+

*Pompa çıkışları 11 diş / **Pumps outlet 11 threads*
*Opsiyonel 8 diş / **Optional 8 threads*

Pompa Kodlaması / *Identification Code*

S8 CR 135 G 50 / 4 -2

Pompa Çapı	*Pump Diameter*
Paslanmaz	*Stainless Steel*
Nominal Debi	*Nominal Flow Rate*
Model	*Model Code*
Motor Gücü (HP)	*Motor Power (HP)*
Kademe Sayısı	*Stage Number*
Küçültülmüş Çaplı Fan Sayısı	*Reduced Impeller*

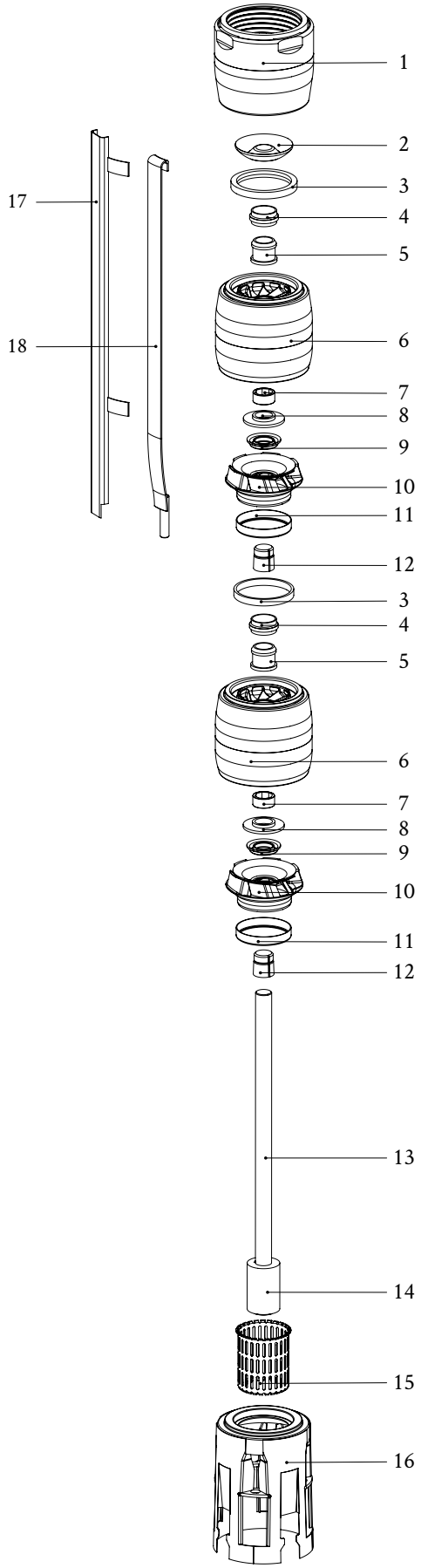

No	Parça Adı	Malzeme
1	Pompa Çıkışı	Paslanmaz Çelik (AISI 304)
2	Klepe Sacı	Paslanmaz Çelik (AISI 304)
3	Fan Merkezleme Lastiği	Kauçuk (NBR)
4	Son Kademe Burcu	Paslanmaz Çelik (AISI 304)
5	Mil Merkezleme Lastiği	Kauçuk (NBR)
6	Kademe	Paslanmaz Çelik (AISI 304)
7	Stoper Somunu	Paslanmaz Çelik (AISI 304)
8	Stoper Burcu	Paslanmaz Çelik (AISI 304)
9	Fan Tespit Somunu	Paslanmaz Çelik (AISI 304)
10	Fan	Paslanmaz Çelik (AISI 304)
11	Fan Aşınma Bileziği	Paslanmaz Çelik (AISI 304)
12	Fan Tespit Burcu	Paslanmaz Çelik (AISI 304)
13	Mil	Paslanmaz Çelik (AISI 431)
14	Kaplin	Paslanmaz Çelik (AISI 420)
15	Filtre	Paslanmaz Çelik (AISI 304)
16	Emiş Adaptörü	Paslanmaz Çelik (AISI 304)
17	Kablo Koruyucu	Paslanmaz Çelik (AISI 304)
18	Gergi Çıtası	Paslanmaz Çelik (AISI 304)

No	Components	Material
1	Outlet	Stainless Steel (AISI 304)
2	Valve Cup	Stainless Steel (AISI 304)
3	Neck Ring	Rubber (NBR)
4	Upper Bearing	Stainless Steel (AISI 304)
5	Inter Bearing	Rubber (NBR)
6	Stage	Stainless Steel (AISI 304)
7	Nut for Stop Ring	Stainless Steel (AISI 304)
8	Stop Ring	Stainless Steel (AISI 304)
9	Nut for Split Cone	Stainless Steel (AISI 304)
10	Impeller	Stainless Steel (AISI 304)
11	Wear Ring	Stainless Steel (AISI 304)
12	Split Cone / Collet	Stainless Steel (AISI 304)
13	Shaft	Stainless Steel (AISI 431)
14	Coupling	Stainless Steel (AISI 420)
15	Strainer	Stainless Steel (AISI 304)
16	Suction	Stainless Steel (AISI 304)
17	Cable Guard	Stainless Steel (AISI 304)
18	Strap	Stainless Steel (AISI 304)

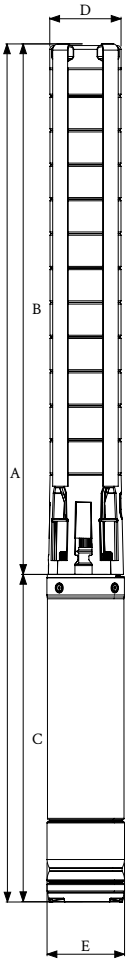

Pompa Tipi *Pump Type*	Motor				Ölçüler / *Dimensions (mm)*					Toplam Ağırlık *Total Weight (kg)*
	Tipi *Type*	Ø	HP	kW	Boy / *Length*			Çap / *Dia*		
					A	B	C	D	E	
S4CR5C 01/08-M	S095MC/01-M	4”	1	0,75	787	346	441	96	95	15
S4CR5C 1,5/10-M	S095MC/1,5-M	4”	1,5	1,1	855	388	467	96	95	16
S4CR5C 1,5/12-M	S095MC/1,5-M	4”	1,5	1,1	897	430	467	96	95	17
S4CR5C 02/15-M	S095MC/02-M	4”	2	1,5	988	493	495	96	95	19
S4CR5C 02/17-M	S095MC/02-M	4”	2	1,5	1030	535	495	96	95	20
S4CR5C 03/21-M	S095MC/03-M	4”	3	2,2	1114	619	495	96	95	21
S4CR5C 03/25-M	S095MC/03-M	4”	3	2,2	1301	703	598	96	95	27
S4CR5C 01/08	S095MC/01-T	4”	1	0,75	751	346	405	96	95	14
S4CR5C 1,5/10	S095MC/1,5-T	4”	1,5	1,1	829	388	441	96	95	15
S4CR5C 1,5/12	S095MC/1,5-T	4”	1,5	1,1	871	430	441	96	95	16
S4CR5C 02/15	S095MC/02-T	4”	2	1,5	952	493	459	96	95	17
S4CR5C 02/17	S095MC/02-T	4”	2	1,5	994	535	459	96	95	18
S4CR5C 03/21	S095MC/03-T	4”	3	2,2	1114	619	495	96	95	21
S4CR5C 03/25	S095MC/03-T	4”	3	2,2	1198	703	495	96	95	22
S4CR5C 04/30	S095MC/04-T	4”	4	3	1363	808	555	96	95	28
S4CR5C 04/33	S095MC/04-T	4”	4	3	1426	871	555	96	95	29
S4CR5C 04/36	S095MC/04-T	4”	4	3	1486	931	555	96	95	29
S4CR5C 05/38	S095MC/05-T	4”	5,5	4	1601	976	625	96	95	34
S4CR5C 05/38	S145MC/05	6”	5,5	4	1601	976	625	134	145	60
S4CR5C 05/41	S095MC/05-T	4”	5,5	4	1664	1039	625	96	95	35
S4CR5C 05/41	S145MC/05	6”	5,5	4	1664	1039	625	134	145	61
S4CR5C 05/44	S095MC/05-T	4”	5,5	4	1727	1102	625	96	95	37
S4CR5C 05/44	S145MC/05	6”	5,5	4	1727	1102	625	134	145	63
S4CR5C 07/48	S095MC/07-T	4”	7,5	5,5	1909	1186	723	96	95	42
S4CR5C 07/48	S145MC/07	6”	7,5	5,5	1811	1186	625	134	145	64
S4CR5C 07/52	S095MC/07-T	4”	7,5	5,5	1991	1268	723	96	95	43
S4CR5C 07/52	S145MC/07	6”	7,5	5,5	1893	1268	625	134	145	65
S4CR5C 07/56	S095MC/07-T	4”	7,5	5,5	2075	1352	723	96	95	45
S4CR5C 07/56	S145MC/07	6”	7,5	5,5	1977	1352	625	134	145	67
S4CR5C 07/60	S095MC/07-T	4”	7,5	5,5	2159	1436	723	96	95	46
S4CR5C 07/60	S145MC/07	6”	7,5	5,5	2061	1436	625	134	145	68
S4CR5C 10/65	S095MC/10-T	4”	10	7,5	2301	1541	760	96	95	50
S4CR5C 10/65	S145MC/10	6”	10	7,5	2201	1541	660	134	145	74
S4CR5C 10/70	S095MC/10-T	4”	10	7,5	2406	1646	760	96	95	52
S4CR5C 10/70	S145MC/10	6”	10	7,5	2306	1646	660	134	145	76
S4CR5C 10/75[1)]	S095MC/10-T	4”	10	7,5	2541	1781	760	138	95	53
S4CR5C 10/75[1)]	S145MC/10	6”	10	7,5	2441	1781	660	138	145	77
S4CR5C 10/80[1)]	S095MC/10-T	4”	10	7,5	2646	1886	760	138	95	55
S4CR5C 10/80[1)]	S145MC/10	6”	10	7,5	2546	1886	660	138	145	79
S4CR5C 10/85[1)]	S095MC/10-T	4”	10	7,5	2751	1991	760	138	95	57
S4CR5C 10/85[1)]	S145MC/10	6”	10	7,5	2651	1991	660	138	145	81

[1)]Kılıflı pompa /
[1)]Pump in sleeve

Pompa Tipi *Pump Type*	Motor				Ölçüler / *Dimensions (mm)*					Toplam Ağırlık *Total Weight (kg)*
	Tipi *Type*	Ø	HP	kW	Boy / *Length*			Çap / *Dia*		
					A	B	C	D	E	
S4CR8D 01/05-M	S095MC/01-M	4”	1	0,75	856	415	441	96	95	15
S4CR8D 1,5/07-M	S095MC/1,5-M	4”	1,5	1,1	960	493	467	96	95	17
S4CR8D 02/10-M	S095MC/02-M	4”	2	1,5	1115	620	495	96	95	20
S4CR8D 03/12-M	S095MC/03-M	4”	3	2,2	1301	703	598	96	95	25
S4CR8D 03/15-M	S095MC/03-M	4”	3	2,2	1428	830	598	96	95	27
S4CR8D 01/05	S095MC/01-T	4”	1	0,75	820	415	405	96	95	13
S4CR8D 1,5/07	S095MC/1,5-T	4”	1,5	1,1	934	493	441	96	95	16
S4CR8D 02/10	S095MC/02-T	4”	2	1,5	1079	620	459	96	95	18
S4CR8D 03/12	S095MC/03-T	4”	3	2,2	1198	703	495	96	95	21
S4CR8D 03/15	S095MC/03-T	4”	3	2,2	1325	830	495	96	95	22
S4CR8D 04/18	S095MC/04-T	4”	4	3	1510	955	555	96	95	27
S4CR8D 05/21	S095MC/05-T	4”	5,5	4	1715	1090	625	96	95	32
S4CR8D 05/21	S145MC/05	6”	5,5	4	1715	1090	625	134	145	58
S4CR8D 05/23	S095MC/05-T	4”	5,5	4	1793	1168	625	96	95	33
S4CR8D 05/23	S145MC/05	6”	5,5	4	1793	1168	625	134	145	59
S4CR8D 05/25	S095MC/05-T	4”	5,5	4	1875	1250	625	96	95	34
S4CR8D 05/25	S145MC/05	6”	5,5	4	1875	1250	625	134	145	60
S4CR8D 05/27	S095MC/05-T	4”	5,5	4	1962	1337	625	96	95	35
S4CR8D 05/27	S145MC/05	6”	5,5	4	1962	1337	625	134	145	61
S4CR8D 07/30	S095MC/07-T	4”	7,5	5,5	2183	1460	723	96	95	41
S4CR8D 07/30	S145MC/07	6”	7,5	5,5	2085	1460	625	134	145	63
S4CR8D 07/34	S095MC/07-T	4”	7,5	5,5	2339	1616	723	96	95	42
S4CR8D 07/34	S145MC/07	6”	7,5	5,5	2241	1616	625	134	145	64
S4CR8D 07/37	S095MC/07-T	4”	7,5	5,5	2476	1753	723	96	95	43
S4CR8D 07/37	S145MC/07	6”	7,5	5,5	2378	1753	625	134	145	65
S4CR8D 10/41	S095MC/10-T	4”	10	7,5	2629	1869	760	96	95	48
S4CR8D 10/41	S145MC/10	6”	10	7,5	2529	1869	660	134	145	72
S4CR8D 10/44	S095MC/10-T	4”	10	7,5	2807	2047	760	96	95	50
S4CR8D 10/44	S145MC/10	6”	10	7,5	2707	2047	660	134	145	74
S4CR8D 10/47	S095MC/10-T	4”	10	7,5	2894	2134	760	96	95	51
S4CR8D 10/47	S145MC/10	6”	10	7,5	2794	2134	660	134	145	75
S4CR8D 10/50	S095MC/10-T	4”	10	7,5	3063	2303	760	96	95	53
S4CR8D 10/50	S145MC/10	6”	10	7,5	2963	2303	660	134	145	77
S4CR8D 12/55	S145MC/12	6”	12,5	9	3153	2448	705	134	145	85
S4CR8D 12/58	S145MC/12	6”	12,5	9	3718	3013	705	134	145	87
S4CR8D 12/62	S145MC/12	6”	12,5	9	3834	3129	705	134	145	88
S4CR8D 15/66	S145MC/15	6”	15	11	4099	3349	750	134	145	95
S4CR8D 15/70[1)]	S145MC/15	6”	15	11	4215	3465	750	138	145	98
S4CR8D 15/73[1)]	S145MC/15	6”	15	11	4393	3643	750	138	145	99
S4CR8D 17/78[1)]	S145MC/17	6”	17,5	13	4588	3788	800	138	145	106
S4CR8D 17/82[1)]	S145MC/17	6”	17,5	13	4812	4012	800	138	145	108
S4CR8D 20/87[1)]	S145MC/20	6”	20	15	4978	4128	850	138	145	116
S4CR8D 20/91[1)]	S145MC/20	6”	20	15	5249	4399	850	138	145	117
S4CR8D 20/95[1)]	S145MC/20	6”	20	15	5365	4515	850	138	145	119
S4CR8D 20/100[1)]	S145MC/20	6”	20	15	5627	4777	850	138	145	121

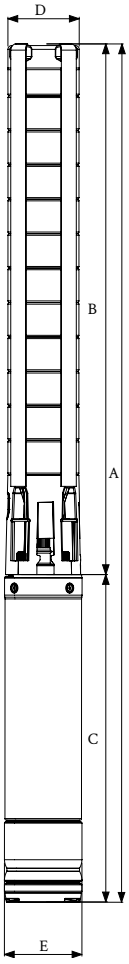

[1)]Kılıflı pompa /
[1)]Pump in sleeve

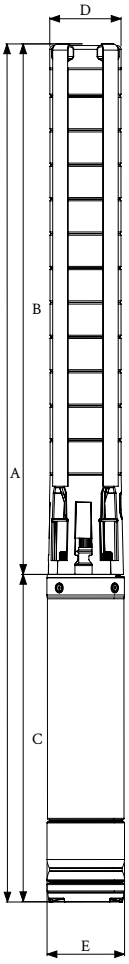

Pompa Tipi *Pump Type*	Motor				Ölçüler / *Dimensions (mm)*					Toplam Ağırlık *Total Weight (kg)*
	Tipi *Type*	Ø	HP	kW	Boy / *Length*			Çap / *Dia*		
					A	B	C	D	E	
S4CR14E 02/05-M	S095MC/02-M	4”	2	1,5	1005	510	495	96	95	19
S4CR14E 03/06-M	S095MC/03-M	4”	3	2,2	1173	575	598	96	95	24
S4CR14E 03/07-M	S095MC/03-M	4”	3	2,2	1238	640	598	96	95	25
S4CR14E 02/05	S095MC/02-T	4”	2	1,5	969	510	459	96	95	17
S4CR14E 03/06	S095MC/03-T	4”	3	2,2	1070	575	495	96	95	19
S4CR14E 03/07	S095MC/03-T	4”	3	2,2	1135	640	495	96	95	20
S4CR14E 04/08	S095MC/04-T	4”	4	3	1260	705	555	96	95	24
S4CR14E 04/09	S095MC/04-T	4”	4	3	1325	770	555	96	95	25
S4CR14E 04/10	S095MC/04-T	4”	4	3	1390	835	555	96	95	25
S4CR14E 04/11	S095MC/04-T	4”	4	3	1455	900	555	96	95	26
S4CR14E 05/12	S095MC/05-T	4”	5,5	4	1590	965	625	96	95	29
S4CR14E 05/12	S145MC/05	6”	5,5	4	1590	965	625	134	145	56
S4CR14E 05/13	S095MC/05-T	4”	5,5	4	1655	1030	625	96	95	30
S4CR14E 05/13	S145MC/05	6”	5,5	4	1655	1030	625	134	145	56
S4CR14E 05/14	S095MC/05-T	4”	5,5	4	1720	1095	625	96	95	30
S4CR14E 05/14	S145MC/05	6”	5,5	4	1720	1095	625	134	145	57
S4CR14E 07/15	S095MC/07-T	4”	7,5	5,5	1883	1160	723	96	95	35
S4CR14E 07/15	S145MC/07	6”	7,5	5,5	1785	1160	625	134	145	57
S4CR14E 07/16	S095MC/07-T	4”	7,5	5,5	1948	1225	723	96	95	35
S4CR14E 07/16	S145MC/07	6”	7,5	5,5	1850	1225	625	134	145	58
S4CR14E 07/17	S095MC/07-T	4”	7,5	5,5	2013	1290	723	96	95	36
S4CR14E 07/17	S145MC/07	6”	7,5	5,5	1915	1290	625	134	145	58
S4CR14E 07/18	S095MC/07-T	4”	7,5	5,5	2078	1355	723	96	95	37
S4CR14E 07/18	S145MC/07	6”	7,5	5,5	1980	1355	625	134	145	59
S4CR14E 10/19	S095MC/10-T	4”	10	7,5	2180	1420	760	96	95	41
S4CR14E 10/19	S145MC/10	6”	10	7,5	2080	1420	660	134	145	65
S4CR14E 10/20	S095MC/10-T	4”	10	7,5	2245	1485	760	96	95	41
S4CR14E 10/20	S145MC/10	6”	10	7,5	2145	1485	660	134	145	65
S4CR14E 10/21	S095MC/10-T	4”	10	7,5	2310	1550	760	96	95	41
S4CR14E 10/21	S145MC/10	6”	10	7,5	2210	1550	660	134	145	65
S4CR14E 10/22	S095MC/10-T	4”	10	7,5	2375	1615	760	96	95	41
S4CR14E 10/22	S145MC/10	6”	10	7,5	2275	1615	660	134	145	65
S4CR14E 10/23	S095MC/10-T	4”	10	7,5	2440	1680	760	96	95	42
S4CR14E 10/23	S145MC/10	6”	10	7,5	2340	1680	660	134	145	66
S4CR14E 10/24	S095MC/10-T	4”	10	7,5	2505	1745	760	96	95	42
S4CR14E 10/24	S145MC/10	6”	10	7,5	2405	1745	660	134	145	66
S4CR14E 10/25	S095MC/10-T	4”	10	7,5	2632	1872	760	96	95	42
S4CR14E 10/25	S145MC/10	6”	10	7,5	2532	1872	660	134	145	66

Pompa Tipi *Pump Type*	Motor				Ölçüler / *Dimensions (mm)*					Toplam Ağırlık *Total Weight (kg)*
	Tipi *Type*	Ø	HP	kW	Boy / *Length*			Çap / *Dia*		
					A	B	C	D	E	
S6CR10L 01/02-M	S095MC/01-M	4”	1	0,75	855	414	441	134	95	18
S6CR10L 1,5/03-M	S095MC/1,5-M	4”	1,5	1,1	947	480	467	134	95	20
S6CR10L 02/04-M	S095MC/02-M	4”	2	1,5	1041	546	495	134	95	23
S6CR10L 03/05-M	S095MC/03-M	4”	3	2,2	1210	612	598	134	95	29
S6CR10L 03/06-M	S095MC/03-M	4”	3	2,2	1276	678	598	134	95	31
S6CR10L 01/02	S095MC/01-T	4”	1	0,75	819	414	405	134	95	16
S6CR10L 1,5/03	S095MC/1,5-T	4”	1,5	1,1	921	480	441	134	95	18
S6CR10L 02/04	S095MC/02-T	4”	2	1,5	1005	546	459	134	95	21
S6CR10L 03/05	S095MC/03-T	4”	3	2,2	1107	612	495	134	95	24
S6CR10L 03/06	S095MC/03-T	4”	3	2,2	1173	678	495	134	95	26
S6CR10L 04/07	S095MC/04-T	4”	4	3	1299	744	555	134	95	31
S6CR10L 04/08	S095MC/04-T	4”	4	3	1365	810	555	134	95	32
S6CR10L 05/09	S145MC/05	6”	5,5	4	1501	876	625	134	145	63
S6CR10L 05/10	S145MC/05	6”	5,5	4	1567	942	625	134	145	64
S6CR10L 07/11	S145MC/07	6”	7,5	5,5	1633	1008	625	134	145	66
S6CR10L 07/12	S145MC/07	6”	7,5	5,5	1699	1074	625	134	145	67
S6CR10L 07/13	S145MC/07	6”	7,5	5,5	1765	1140	625	134	145	69
S6CR10L 07/14	S145MC/07	6”	7,5	5,5	1831	1206	625	134	145	70
S6CR10L 10/15	S145MC/10	6”	10	7,5	1932	1272	660	134	145	76
S6CR10L 10/16	S145MC/10	6”	10	7,5	1998	1338	660	134	145	77
S6CR10L 10/17	S145MC/10	6”	10	7,5	2064	1404	660	134	145	78
S6CR10L 10/18	S145MC/10	6”	10	7,5	2130	1470	660	134	145	80
S6CR10L 10/19	S145MC/10	6”	10	7,5	2196	1536	660	134	145	81
S6CR10L 10/20	S145MC/10	6”	10	7,5	2262	1602	660	134	145	83
S6CR10L 10/21	S145MC/10	6”	10	7,5	2328	1668	660	134	145	84
S6CR10L 12/22	S145MC/12	6”	12,5	9	2439	1734	705	134	145	91
S6CR10L 12/23	S145MC/12	6”	12,5	9	2505	1800	705	134	145	92
S6CR10L 12/24	S145MC/12	6”	12,5	9	2571	1866	705	134	145	94
S6CR10L 12/25	S145MC/12	6”	12,5	9	2637	1932	705	134	145	95
S6CR10L 12/26	S145MC/12	6”	12,5	9	2703	1998	705	134	145	96
S6CR10L 15/27	S145MC/15	6”	15	11	2814	2064	750	134	145	104
S6CR10L 15/28	S145MC/15	6”	15	11	2880	2130	750	134	145	105
S6CR10L 15/29	S145MC/15	6”	15	11	2946	2196	750	134	145	107
S6CR10L 17/30	S145MC/17	6”	17,5	13	3062	2262	800	134	145	113
S6CR10L 17/33	S145MC/17	6”	17,5	13	3260	2460	800	134	145	118
S6CR10L 17/35	S145MC/17	6”	17,5	13	3392	2592	800	134	145	120
S6CR10L 20/37	S145MC/20	6”	20	15	3574	2724	850	134	145	129
S6CR10L 20/39	S145MC/20	6”	20	15	3706	2856	850	134	145	163
S6CR10L 20/41	S145MC/20	6”	20	15	3838	2988	850	134	145	166
S6CR10L 25/43	S145MC/25	6”	25	18,5	4050	3120	930	134	145	179
S6CR10L 25/45[1)]	S145MC/25	6”	25	18,5	4182	3252	930	171	145	182
S6CR10L 25/47[1)]	S145MC/25	6”	25	18,5	4314	3384	930	171	145	186
S6CR10L 25/49[1)]	S145MC/25	6”	25	18,5	4446	3516	930	171	145	189

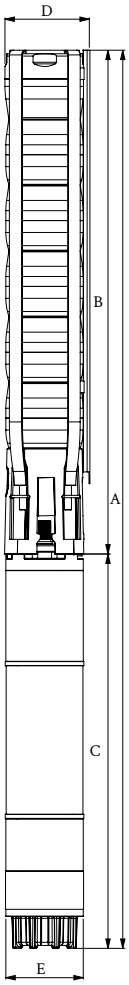

[1)]Kılıflı pompa /
[1)]Pump in sleeve

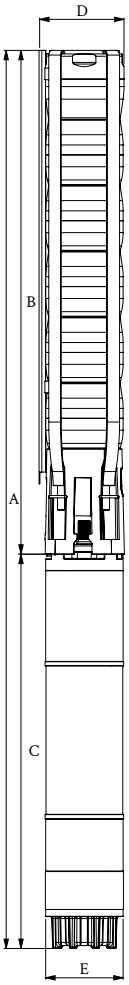

Pompa Tipi *Pump Type*	Motor				Ölçüler / *Dimensions (mm)*					Toplam Ağırlık *Total Weight (kg)*
	Tipi *Type*	Ø	HP	kW	Boy / *Length*			Çap / *Dia*		
					A	B	C	D	E	
S6CR17A 01/01-M	S095MC/01-M	4”	1	0,75	789	348	441	134	95	15
S6CR17A 1,5/02-M	S095MC/02-M	4”	1,5	1,1	909	414	495	134	95	19
S6CR17A 03/03-M	S095MC/03-M	4”	3	2,2	1078	480	598	134	95	25
S6CR17A 03/04-M	S095MC/04-M	4”	3	2,2	1171	546	625	134	95	28
S6CR17A 01/01	S095MC/01-T	4”	1	0,75	753	348	405	134	95	14
S6CR17A 1,5/02	S095MC/1,5-T	4”	1,5	1,1	855	414	441	134	95	16
S6CR17A 03/03	S095MC/03-T	4”	3	2,2	975	480	495	134	95	20
S6CR17A 03/04	S095MC/03-T	4”	3	2,2	1041	546	495	134	95	22
S6CR17A 04/05	S095MC/04-T	4”	4	3	1167	612	555	134	95	28
S6CR17A 05/06	S145MC/05	6”	5,5	4	1303	678	625	134	145	58
S6CR17A 05/07	S145MC/05	6”	5,5	4	1369	744	625	134	145	61
S6CR17A 07/08	S145MC/07	6”	7,5	5,5	1435	810	625	134	145	63
S6CR17A 07/09	S145MC/07	6”	7,5	5,5	1501	876	625	134	145	65
S6CR17A 07/10	S145MC/07	6”	7,5	5,5	1567	942	625	134	145	66
S6CR17A 10/11	S145MC/10	6”	10	7,5	1668	1008	660	134	145	71
S6CR17A 10/12	S145MC/10	6”	10	7,5	1734	1074	660	134	145	73
S6CR17A 10/13	S145MC/10	6”	10	7,5	1800	1140	660	134	145	74
S6CR17A 12/14	S145MC/12	6”	12,5	9	1911	1206	705	134	145	81
S6CR17A 12/15	S145MC/12	6”	12,5	9	1977	1272	705	134	145	82
S6CR17A 12/16	S145MC/12	6”	12,5	9	2043	1338	705	134	145	84
S6CR17A 12/17	S145MC/12	6”	12,5	9	2109	1404	705	134	145	85
S6CR17A 15/18	S145MC/15	6”	15	11	2220	1470	750	134	145	93
S6CR17A 15/19	S145MC/15	6”	15	11	2286	1536	750	134	145	95
S6CR17A 15/20	S145MC/15	6”	15	11	2352	1602	750	134	145	97
S6CR17A 17/21	S145MC/17	6”	17,5	13	2468	1668	800	134	145	103
S6CR17A 17/22	S145MC/17	6”	17,5	13	2534	1734	800	134	145	105
S6CR17A 17/23	S145MC/17	6”	17,5	13	2600	1800	800	134	145	106
S6CR17A 17/24	S145MC/17	6”	17,5	13	2666	1866	800	134	145	108
S6CR17A 20/25	S145MC/20	6”	20	15	2782	1932	850	134	145	116
S6CR17A 20/26	S145MC/20	6”	20	15	2848	1998	850	134	145	117
S6CR17A 20/27	S145MC/20	6”	20	15	2914	2064	850	134	145	119
S6CR17A 25/28	S145MC/25	6”	25	18,5	3060	2130	930	134	145	129
S6CR17A 25/29	S145MC/25	6”	25	18,5	3126	2196	930	134	145	131
S6CR17A 25/30	S145MC/25	6”	25	18,5	3192	2262	930	134	145	133
S6CR17A 25/31	S145MC/25	6”	25	18,5	3258	2328	930	134	145	134
S6CR17A 25/32	S145MC/25	6”	25	18,5	3324	2394	930	134	145	136
S6CR17A 25/33	S145MC/25	6”	25	18,5	3390	2460	930	134	145	137
S6CR17A 30/34	S145MC/30	6”	30	22	3536	2526	1010	134	145	148
S6CR17A 30/35	S145MC/30	6”	30	22	3602	2592	1010	134	145	150
S6CR17A 30/36	S145MC/30	6”	30	22	3668	2658	1010	134	145	151
S6CR17A 30/37	S145MC/30	6”	30	22	3734	2724	1010	134	145	153
S6CR17A 30/38	S145MC/30	6”	30	22	3800	2790	1010	134	145	154
S6CR17A 30/39	S145MC/30	6”	30	22	3866	2856	1010	134	145	156
S6CR17A 30/40	S145MC/30	6”	30	22	3932	2922	1010	134	145	158
S6CR17A 35/43	S145MC/35	6”	35	26	4170	3120	1050	134	145	166
S6CR17A 35/45[1)]	S145MC/35	6”	35	26	4302	3252	1050	171	145	170
S6CR17A 35/48[1)]	S145MC/35	6”	35	26	4500	3450	1050	171	145	174
S6CR17A 40/51[1)]	S145MC/40	6”	40	30	4748	3648	1100	171	145	185
S6CR17A 40/53[1)]	S145MC/40	6”	40	30	4880	3780	1100	171	145	188
S6CR17A 50/55[1)]	S145MC/50	6”	50	37	5092	3912	1180	171	145	199
S6CR17A 50/58[1)]	S145MC/50	6”	50	37	5290	4110	1180	171	145	203
S6CR17A 50/60[1)]	S145MC/50	6”	50	37	5422	4242	1180	171	145	207

[1)]Kılıflı pompa /
[1)]Pump in sleeve

Pompa Tipi *Pump Type*	Motor				Ölçüler / *Dimensions (mm)*					Toplam Ağırlık *Total Weight (kg)*
	Tipi *Type*	Ø	HP	kW	Boy / *Length*			Çap / *Dia*		
					A	B	C	D	E	
S6CR24M 01/01-M	S095MC/01-M	4”	1	0,75	826	385	441	134	95	15
S6CR24M 02/02-M	S095MC/02-M	4”	2	1,5	975	480	495	134	95	20
S6CR24M 03/03-M	S095MC/03-M	4”	3	2,2	1173	575	598	134	95	26
S6CR24M 01/01	S095MC/01-T	4”	1	0,75	790	385	405	134	95	14
S6CR24M 02/02	S095MC/02-T	4”	2	1,5	939	480	459	134	95	18
S6CR24M 03/03	S095MC/03-T	4”	3	2,2	1070	575	495	134	95	21
S6CR24M 04/04	S095MC/04-T	4”	4	3	1225	670	555	134	95	27
S6CR24M 04/05	S095MC/04-T	4”	4	3	1320	765	555	134	95	30
S6CR24M 05/06	S145MC/05	6”	5,5	4	1485	860	625	134	145	61
S6CR24M 05/07	S145MC/05	6”	5,5	4	1580	955	625	134	145	64
S6CR24M 07/08	S145MC/07	6”	7,5	5,5	1675	1050	625	134	145	66
S6CR24M 07/09	S145MC/07	6”	7,5	5,5	1770	1145	625	134	145	68
S6CR24M 10/10	S145MC/10	6”	10	7,5	1900	1240	660	134	145	74
S6CR24M 10/11	S145MC/10	6”	10	7,5	1999	1339	660	134	145	76
S6CR24M 12/12	S145MC/12	6”	12,5	9	2140	1435	705	134	145	83
S6CR24M 12/13	S145MC/12	6”	12,5	9	2225	1520	705	134	145	85
S6CR24M 12/14	S145MC/12	6”	12,5	9	2320	1615	705	134	145	87
S6CR24M 15/15	S145MC/15	6”	15	11	2460	1710	750	134	145	95
S6CR24M 15/16	S145MC/15	6”	15	11	2555	1805	750	134	145	97
S6CR24M 17/17	S145MC/17	6”	17,5	13	2700	1900	800	134	145	104
S6CR24M 17/18	S145MC/17	6”	17,5	13	2795	1995	800	134	145	107
S6CR24M 17/19	S145MC/17	6”	17,5	13	2890	2090	800	134	145	109
S6CR24M 20/20	S145MC/20	6”	20	15	3040	2190	850	134	145	117
S6CR24M 20/21	S145MC/20	6”	20	15	3135	2285	850	134	145	119
S6CR24M 20/22	S145MC/20	6”	20	15	3230	2380	850	134	145	121
S6CR24M 25/23	S145MC/25	6”	25	18,5	3405	2475	930	134	145	132
S6CR24M 25/24	S145MC/25	6”	25	18,5	3500	2570	930	134	145	134
S6CR24M 25/25	S145MC/25	6”	25	18,5	3595	2665	930	134	145	136
S6CR24M 25/26	S145MC/25	6”	25	18,5	3690	2760	930	134	145	138
S6CR24M 25/27	S145MC/25	6”	25	18,5	3785	2855	930	134	145	140
S6CR24M 30/28	S145MC/30	6”	30	22	3981	2971	1010	134	145	152
S6CR24M 30/29	S145MC/30	6”	30	22	4077	3067	1010	134	145	154
S6CR24M 30/30	S145MC/30	6”	30	22	4173	3163	1010	134	145	156
S6CR24M 30/31	S145MC/30	6”	30	22	4269	3259	1010	134	145	158
S6CR24M 35/32	S145MC/35	6”	35	26	4405	3355	1050	134	145	164
S6CR24M 35/33	S145MC/35	6”	35	26	4501	3451	1050	134	145	166
S6CR24M 35/34	S145MC/35	6”	35	26	4597	3547	1050	134	145	168
S6CR24M 35/35	S145MC/35	6”	35	26	4700	3650	1050	134	145	210
S6CR24M 35/36	S145MC/35	6”	35	26	4810	3760	1050	134	145	219
S6CR24M 40/37	S145MC/40	6”	40	30	4970	3870	1100	134	145	233
S6CR24M 40/38	S145MC/40	6”	40	30	5060	3960	1100	134	145	241
S6CR24M 40/39	S145MC/40	6”	40	30	5150	4050	1100	134	145	250

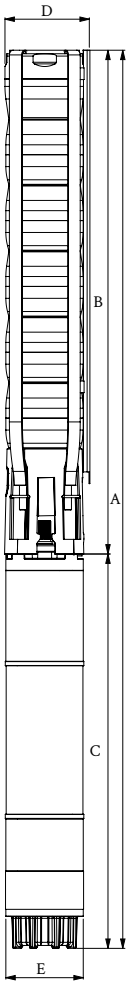

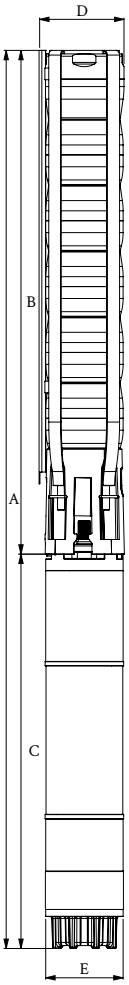

Pompa Tipi *Pump Type*	Motor				Ölçüler / *Dimensions (mm)*					Toplam Ağırlık *Total Weight (kg)*
	Tipi *Type*	Ø	HP	kW	Boy / *Length*			Çap / *Dia*		
					A	B	C	D	E	
S6CR30B 01/01-1 M	S095MC/01-M	4”	1	0,75	826	385	441	134	95	15
S6CR30B 1,5/01 M	S095MC/1,5-M	4”	1,5	1,1	852	385	467	134	95	16
S6CR30B 02/02-1 M	S095MC/02-M	4”	2	1,5	975	480	495	134	95	20
S6CR30B 03/02 M	S095MC/03-M	4”	3	2,2	1078	480	598	134	95	24
S6CR30B 01/01-1	S095MC/01-T	4”	1	0,75	790	385	405	134	95	14
S6CR30B 1,5/01	S095MC/1,5-T	4”	1,5	1,1	826	385	441	134	95	15
S6CR30B 02/02-1	S095MC/02-T	4”	2	1,5	939	480	459	134	95	18
S6CR30B 03/02	S095MC/03-T	4”	3	2,2	975	480	495	134	95	19
S6CR30B 04/03	S095MC/04-T	4”	4	3	1130	575	555	134	95	25
S6CR30B 05/04	S145MC/05	6”	5,5	4	1295	670	625	134	145	57
S6CR30B 07/05	S145MC/07	6”	7,5	5,5	1390	765	625	134	145	59
S6CR30B 07/06	S145MC/07	6”	7,5	5,5	1485	860	625	134	145	61
S6CR30B 10/07	S145MC/10	6”	10	7,5	1615	955	660	134	145	68
S6CR30B 10/08	S145MC/10	6”	10	7,5	1710	1050	660	134	145	70
S6CR30B 12/09	S145MC/12	6”	12,5	9	1850	1145	705	134	145	77
S6CR30B 12/10	S145MC/12	6”	12,5	9	1945	1240	705	134	145	79
S6CR30B 12/11	S145MC/12	6”	12,5	9	2044	1339	705	134	145	81
S6CR30B 15/12	S145MC/15	6”	15	11	2185	1435	750	134	145	89
S6CR30B 15/13	S145MC/15	6”	15	11	2270	1520	750	134	145	91
S6CR30B 17/14	S145MC/17	6”	17,5	13	2415	1615	800	134	145	98
S6CR30B 17/15	S145MC/17	6”	17,5	13	2510	1710	800	134	145	100
S6CR30B 20/16	S145MC/20	6”	20	15	2655	1805	850	134	145	108
S6CR30B 20/17	S145MC/20	6”	20	15	2750	1900	850	134	145	110
S6CR30B 25/18	S145MC/25	6”	25	18,5	2925	1995	930	134	145	122
S6CR30B 25/19	S145MC/25	6”	25	18,5	3020	2090	930	134	145	124
S6CR30B 25/20	S145MC/25	6”	25	18,5	3120	2190	930	134	145	126
S6CR30B 25/21	S145MC/25	6”	25	18,5	3215	2285	930	134	145	128
S6CR30B 30/22	S145MC/30	6”	30	22	3390	2380	1010	134	145	139
S6CR30B 30/23	S145MC/30	6”	30	22	3485	2475	1010	134	145	141
S6CR30B 30/24	S145MC/30	6”	30	22	3580	2570	1010	134	145	143
S6CR30B 30/25	S145MC/30	6”	30	22	3675	2665	1010	134	145	145
S6CR30B 30/26	S145MC/30	6”	30	22	3770	2760	1010	134	145	147
S6CR30B 35/27	S145MC/35	6”	35	26	3905	2855	1050	134	145	153
S6CR30B 35/28	S145MC/35	6”	35	26	4021	2971	1050	134	145	156
S6CR30B 35/29	S145MC/35	6”	35	26	4117	3067	1050	134	145	158
S6CR30B 35/30	S145MC/35	6”	35	26	4213	3163	1050	134	145	160
S6CR30B 35/31	S145MC/35	6”	35	26	4309	3259	1050	134	145	162
S6CR30B 40/32	S145MC/40	6”	40	30	4455	3355	1100	134	145	170
S6CR30B 40/33	S145MC/40	6”	40	30	4550	3450	1100	134	145	172
S6CR30B 40/34	S145MC/40	6”	40	30	4647	3547	1100	134	145	174
S6CR30B 40/35	S145MC/40	6”	40	30	5099	3999	1100	134	145	216
S6CR30B 50/39[1)]	S145MC/50	6”	50	37	5563	4383	1180	171	145	232
S6CR30B 50/43[1)]	S145MC/50	6”	50	37	5947	4767	1180	171	145	240
S6CR30B 60/46[1)]	S190MC/60	8”	60	45	6115	5055	1060	171	193	291
S6CR30B 60/49[1)]	S190MC/60	8”	60	45	6403	5343	1060	171	193	298
S6CR30B 75/52[1)]	S190MC/75	8”	75	55	6801	5631	1170	171	193	326
S6CR30B 75/54[1)]	S190MC/75	8”	75	55	6993	5823	1170	171	193	330

[1)]Kılıflı pompa /
[1)]Pump in sleeve

Pompa Tipi *Pump Type*	Motor				Ölçüler / *Dimensions (mm)*					Toplam Ağırlık *Total Weight (kg)*
	Tipi *Type*	Ø	HP	kW	Boy / *Length*			Çap / *Dia*		
					A	B	C	D	E	
S6CR46C 03/01-M	S095MC/03-M	4”	3	2,2	993	395	598	145	95	24
S6CR46C 03/01	S095MC/03-T	4”	3	2,2	890	395	495	145	95	19
S6CR46C 04/02	S095MC/04-T	4”	4	3	1064	509	555	145	95	25
S6CR46C 07/03	S145MC/07	6”	7,5	5,5	1245	620	625	145	145	58
S6CR46C 10/04	S145MC/10	6”	10	7,5	1390	730	660	145	145	64
S6CR46C 10/05	S145MC/10	6”	10	7,5	1505	845	660	145	145	67
S6CR46C 12/06	S145MC/12	6”	12,5	9	1660	955	705	145	145	74
S6CR46C 15/07	S145MC/15	6”	15	11	1820	1070	750	145	145	83
S6CR46C 17/08	S145MC/17	6”	17,5	13	1980	1180	800	145	145	90
S6CR46C 20/09	S145MC/20	6”	20	15	2145	1295	850	145	145	99
S6CR46C 20/10	S145MC/20	6”	20	15	2253	1403	850	145	145	101
S6CR46C 25/11	S145MC/25	6”	25	18,5	2445	1515	930	145	145	113
S6CR46C 25/12	S145MC/25	6”	25	18,5	2557	1627	930	145	145	115
S6CR46C 30/13	S145MC/30	6”	30	22	2750	1740	1010	145	145	127
S6CR46C 30/14	S145MC/30	6”	30	22	2861	1851	1010	145	145	129
S6CR46C 30/15	S145MC/30	6”	30	22	2973	1963	1010	145	145	132
S6CR46C 35/16	S145MC/35	6”	35	26	3125	2075	1050	145	145	138
S6CR46C 35/17	S145MC/35	6”	35	26	3237	2187	1050	145	145	141
S6CR46C 40/18	S145MC/40	6”	40	30	3399	2299	1100	145	145	149
S6CR46C 40/19	S145MC/40	6”	40	30	3511	2411	1100	145	145	152
S6CR46C 40/20	S145MC/40	6”	40	30	3623	2523	1100	145	145	154
S6CR46C 50/21	S145MC/50	6”	50	37	3815	2635	1180	145	145	164
S6CR46C 50/22	S145MC/50	6”	50	37	3927	2747	1180	145	145	166
S6CR46C 50/23	S145MC/50	6”	50	37	4039	2859	1180	145	145	169
S6CR46C 50/24	S145MC/50	6”	50	37	4151	2971	1180	145	145	171
S6CR46C 60/25	S190MC/60	8”	60	45	3499	2439	1060	171	193	259
S6CR46C 60/26	S190MC/60	8”	60	45	4611	3551	1060	171	193	261
S6CR46C 60/27	S190MC/60	8”	60	45	4723	3663	1060	171	193	264
S6CR46C 60/28	S190MC/60	8”	60	45	4835	3775	1060	171	193	266
S6CR46C 60/29	S190MC/60	8”	60	45	4947	3887	1060	171	193	269
S6CR46C 60/30	S190MC/60	8”	60	45	5059	3999	1060	171	193	271
S6CR46C 75/31	S190MC/75	8”	75	55	5281	4111	1170	171	193	296
S6CR46C 75/32	S190MC/75	8”	75	55	5393	4223	1170	171	193	298
S6CR46C 75/33	S190MC/75	8”	75	55	5505	4335	1170	171	193	301
S6CR46C 75/34	S190MC/75	8”	75	55	5617	4447	1170	171	193	303
S6CR46C 75/35[1)]	S190MC/75	8”	75	55	5729	4559	1170	171	193	306
S6CR46C 85/36[1)]	S190MC/85	8”	85	63	5921	4671	1250	171	193	321
S6CR46C 85/37[1)]	S190MC/85	8”	85	63	6033	4783	1250	171	193	324
S6CR46C 85/38[1)]	S190MC/85	8”	85	63	6147	4897	1250	171	193	326
S6CR46C 85/39[1)]	S190MC/85	8”	85	63	6261	5011	1250	171	193	329

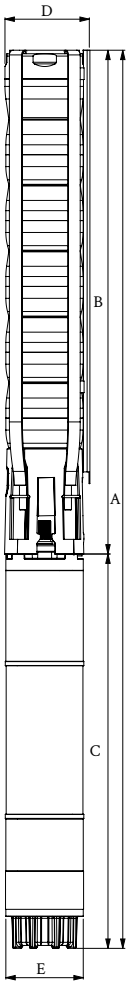

[1)]Kılıflı pompa /
[1)]Pump in sleeve

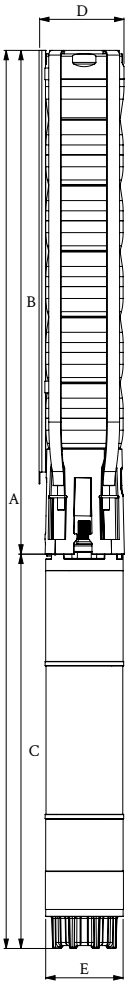

Pompa Tipi *Pump Type*	Motor				Ölçüler / *Dimensions (mm)*					Toplam Ağırlık *Total Weight (kg)*
	Tipi *Type*	Ø	HP	kW	Boy / *Length*			Çap / *Dia*		
					A	B	C	D	E	
S6CR60D 02/01-1 M	S095MC/02-M	4”	2	1,5	895	400	495	145	95	19
S6CR60D 03/01 M	S095MC/03-M	4”	3	2,2	998	400	598	145	95	24
S6CR60D 02/01-1	S095MC/02-T	4”	2	1,5	859	400	459	145	95	17
S6CR60D 03/01	S095MC/03-T	4”	3	2,2	895	400	495	145	95	19
S6CR60D 04/02-1	S095MC/04-T	4”	4	3	1065	510	555	145	95	25
S6CR60D 05/02	S145MC/05	6”	5,5	4	1135	510	625	145	145	55
S6CR60D 07/03	S145MC/07	6”	7,5	5,5	1245	620	625	145	145	58
S6CR60D 10/04	S145MC/10	6”	10	7,5	1390	730	660	145	145	64
S6CR60D 12/05	S145MC/12	6”	12,5	9	1555	850	705	145	145	72
S6CR60D 15/06	S145MC/15	6”	15	11	1710	960	750	145	145	80
S6CR60D 17/07	S145MC/17	6”	17,5	13	1870	1070	800	145	145	88
S6CR60D 20/08	S145MC/20	6”	20	15	2040	1190	850	145	145	96
S6CR60D 25/09	S145MC/25	6”	25	18,5	2230	1300	930	145	145	108
S6CR60D 25/10	S145MC/25	6”	25	18,5	2340	1410	930	145	145	110
S6CR60D 30/11	S145MC/30	6”	30	22	2530	1520	1010	145	145	122
S6CR60D 30/12	S145MC/30	6”	30	22	2650	1640	1010	145	145	124
S6CR60D 35/13	S145MC/35	6”	35	26	2805	1755	1050	145	145	131
S6CR60D 35/14	S145MC/35	6”	35	26	2920	1870	1050	145	145	133
S6CR60D 35/15	S145MC/35	6”	35	26	3035	1985	1050	145	145	139
S6CR60D 40/16	S145MC/40	6”	40	30	3200	2100	1100	145	145	144
S6CR60D 40/17	S145MC/40	6”	40	30	3290	2190	1100	145	145	147
S6CR60D 50/18	S145MC/50	6”	50	37	3482	2302	1180	145	145	156
S6CR60D 50/19	S145MC/50	6”	50	37	3594	2414	1180	145	145	159
S6CR60D 50/20	S145MC/50	6”	50	37	3706	2526	1180	145	145	161
S6CR60D 50/21	S145MC/50	6”	50	37	3818	2638	1180	145	145	164
S6CR60D 60/22	S190MC/60	8”	60	45	3810	2750	1060	171	193	211
S6CR60D 60/23	S190MC/60	8”	60	45	3922	2862	1060	171	193	214
S6CR60D 60/24	S190MC/60	8”	60	45	4034	2974	1060	171	193	216
S6CR60D 75/25	S190MC/75	8”	75	55	4256	3086	1170	171	193	241
S6CR60D 75/26	S190MC/75	8”	75	55	4368	3198	1170	171	193	243
S6CR60D 75/27	S190MC/75	8”	75	55	4480	3310	1170	171	193	246
S6CR60D 75/28	S190MC/75	8”	75	55	4592	3422	1170	171	193	248
S6CR60D 75/29	S190MC/75	8”	75	55	4704	3534	1170	171	193	251
S6CR60D 75/30	S190MC/75	8”	75	55	4816	3646	1170	171	193	253
S6CR90K 05/01	S145MC/05	6”	5,5	4	1075	450	625	145	145	57
S6CR90K 07/02	S145MC/07	6”	7,5	5,5	1225	600	625	145	145	60
S6CR90K 12/03	S145MC/12	6”	12,5	9	1455	750	705	145	145	72
S6CR90K 17/04	S145MC/17	6”	17,5	13	1700	900	800	145	145	86
S6CR90K 20/05	S145MC/20	6”	20	15	1900	1050	850	145	145	95
S6CR90K 25/06	S145MC/25	6”	25	18,5	2130	1200	930	145	145	107
S6CR90K 30/07	S145MC/30	6”	30	22	2360	1350	1010	145	145	119
S6CR90K 35/08	S145MC/35	6”	35	26	2550	1500	1050	145	145	126
S6CR90K 40/09	S145MC/40	6”	40	30	2750	1650	1100	145	145	135
S6CR90K 40/10	S145MC/40	6”	40	30	2900	1800	1100	145	145	138
S6CR90K 50/11	S145MC/50	6”	50	37	3130	1950	1180	145	145	148
S6CR90K 50/12	S145MC/50	6”	50	37	3280	2100	1180	145	145	151

Pompa Tipi *Pump Type*	Motor				Ölçüler / *Dimensions (mm)*					Toplam Ağırlık *Total Weight (kg)*
	Tipi *Type*	Ø	HP	kW	Boy / *Length*			Çap / *Dia*		
					A	B	C	D	E	
S7CR77E 07/01	S145MC/07	6”	7,5	5,5	1187	562	625	171	145	65
S7CR77E 10/02	S145MC/10	6”	10	7,5	1250	590	660	171	145	73
S7CR77E 15/03	S145MC/15	6”	15	11	1560	810	750	171	145	88
S7CR77E 17/04-1	S145MC/17	6”	17	13	1740	940	800	171	145	97
S7CR77E 20/04	S145MC/20	6”	20	15	1790	940	850	171	145	103
S7CR77E 25/05	S145MC/25	6”	25	18,5	2000	1070	930	171	145	116
S7CR77E 30/06	S145MC/30	6”	30	22	2210	1200	1010	171	145	129
S7CR77E 35/07	S145MC/35	6”	35	26	2380	1330	1050	171	145	137
S7CR77E 35/08-1	S145MC/35	6”	35	26	2500	1450	1050	171	145	143
S7CR77E 40/08	S145MC/40	6”	40	30	2550	1450	1100	171	145	149
S7CR77E 40/09	S145MC/40	6”	40	30	2700	1600	1100	171	145	153
S7CR77E 50/10	S170MC/50	7”	50	37	2845	1765	1080	171	170	189
S7CR77E 50/10	S190MC/50	8”	50	37	2755	1765	990	191	193	194
S7CR77E 50/11	S170MC/50	7”	50	37	2973	1893	1080	171	170	193
S7CR77E 50/11	S190MC/50	8”	50	37	2883	1893	990	191	193	198
S7CR77E 60/12	S170MC/60	7”	60	45	3181	2021	1160	171	170	211
S7CR77E 60/12	S190MC/60	8”	60	45	3081	2021	1060	191	193	218
S7CR77E 60/13-1	S170MC/60	7”	60	45	3309	2149	1160	171	170	215
S7CR77E 60/13-1	S190MC/60	8”	60	45	3209	2149	1060	191	193	222
S7CR77E 70/14	S170MC/70	7”	70	52	3492	2277	1215	171	170	227
S7CR77E 70/14	S190MC/70	8”	70	52	3407	2277	1130	191	193	241
S7CR77E 75/15	S170MC/75	7”	75	55	3675	2405	1270	171	170	238
S7CR77E 75/15	S190MC/75	8”	75	55	3575	2405	1170	191	193	252
S7CR77E 80/16	S190MC/80	8”	80	60	3733	2533	1200	191	193	264
S7CR77E 85/17	S190MC/85	8”	85	63	3911	2661	1250	191	193	273
S7CR77E 85/18	S190MC/85	8”	85	63	4039	2789	1250	191	193	277
S7CR77E 100/19	S190MC/100	8”	100	75	4267	2917	1350	191	193	306
S7CR77E 100/20	S190MC/100	8”	100	75	4395	3045	1350	191	193	310
S7CR77E 100/21	S190MC/100	8”	100	75	4523	3173	1350	191	193	314
S7CR77E 125/22	S190MC/125	8”	125	92	4771	3301	1470	191	193	349
S7CR77E 125/23	S190MC/125	8”	125	92	4799	3329	1470	191	193	353
S7CR77E 125/24	S190MC/125	8”	125	92	4827	3357	1470	191	193	357

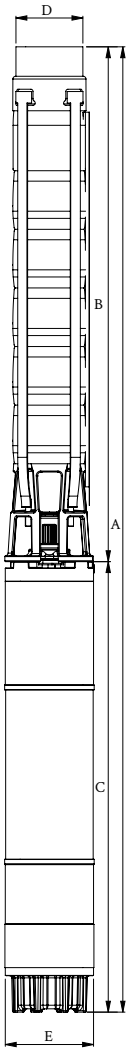

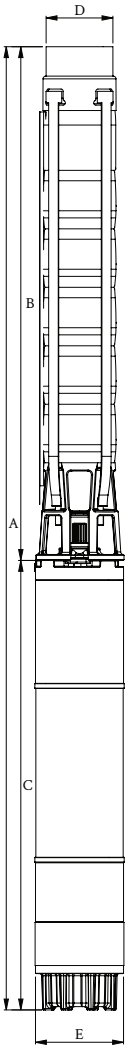

Pompa Tipi *Pump Type*	Motor				Ölçüler / *Dimensions (mm)*					Toplam Ağırlık *Total Weight (kg)*
	Tipi *Type*	Ø	HP	kW	Boy / *Length*			Çap / *Dia*		
					A	B	C	D	E	
S7CR95F 07/01	S145MC/07	6”	7,5	5,5	1185	560	625	171	145	65
S7CR95F 12/02	S145MC/12	6”	12,5	9	1395	690	705	171	145	78
S7CR95F 17/03	S145MC/17	6”	17,5	13	1610	810	800	171	145	93
S7CR95F 25/04	S145MC/25	6”	25	18,5	1870	940	930	171	145	112
S7CR95F 30/05	S145MC/30	6”	30	22	2084	1074	1010	171	145	125
S7CR95F 35/06	S145MC/35	6”	35	26	2250	1200	1050	171	145	133
S7CR95F 40/07	S145MC/40	6”	40	30	2430	1330	1100	171	145	143
S7CR95F 50/08	S170MC/50	7”	50	37	2574	1494	1080	171	170	181
S7CR95F 50/08	S190MC/50	8”	50	37	2484	1494	990	191	193	186
S7CR95F 50/09	S170MC/50	7”	50	37	2695	1615	1080	171	170	185
S7CR95F 50/08	S190MC/50	8”	50	37	2605	1615	990	191	193	190
S7CR95F 60/10	S170MC/60	7”	60	45	2925	1765	1160	171	170	203
S7CR95F 60/10	S190MC/60	8”	60	45	2825	1765	1060	191	193	210
S7CR95F 75/11	S170MC/75	7”	75	55	3163	1893	1270	171	170	222
S7CR95F 75/11	S190MC/75	8”	75	55	3063	1893	1170	191	193	236
S7CR95F 75/12	S170MC/75	7”	75	55	3291	2021	1270	171	170	226
S7CR95F 75/12	S190MC/75	8”	75	55	3191	2021	1170	191	193	240
S7CR95F 75/13	S170MC/75	7”	75	55	3419	2149	1270	171	170	230
S7CR95F 75/13	S190MC/75	8”	75	55	3319	2149	1170	191	193	244
S7CR95F 85/14	S190MC/85	8”	85	63	3527	2277	1250	191	193	261
S7CR95F 100/15	S190MC/100	8”	100	75	3755	2405	1350	191	193	290
S7CR95F 100/16	S190MC/100	8”	100	75	3883	2533	1350	191	193	294
S7CR95F 100/17	S190MC/100	8”	100	75	4011	2661	1350	191	193	298
S7CR95F 125/18	S190MC/125	8”	125	92	4259	2789	1470	191	193	333
S7CR95F 125/19	S190MC/125	8”	125	92	4387	2917	1470	191	193	337
S7CR95F 125/20	S190MC/125	8”	125	92	4515	3045	1470	191	193	341
S7CR95F 125/21	S190MC/125	8”	125	92	4545	3075	1470	191	193	345
S7CR95F 125/22	S190MC/125	8”	125	92	4575	3105	1470	191	193	349
S7CR105L 10/01	S145MC/10	6”	10	7,5	1191	571	620	171	145	76
S7CR105L 15/02	S145MC/15	6”	15	11	1399	699	700	171	145	90
S7CR105L 25/03	S145MC/25	6”	25	18,5	1697	827	870	171	145	114
S7CR105L 30/04	S145MC/30	6”	30	22	1925	955	970	171	145	125
S7CR105L 35/05	S145MC/35	6”	35	26,5	2143	1083	1060	171	145	140
S7CR105L 50/06	S170MC/50	7”	50	37	2291	1211	1080	171	170	178
S7CR105L 50/06	S190MC/50	8”	50	37	2161	1211	950	191	193	188
S7CR105L 50/07	S170MC/50	7”	50	37	2419	1339	1080	171	170	182
S7CR105L 50/07	S190MC/50	8”	50	37	2289	1339	950	191	193	192
S7CR105L 60/08	S170MC/60	7”	60	45	2627	1467	1160	171	170	199
S7CR105L 60/08	S190MC/60	8”	60	45	2417	1467	950	191	193	196
S7CR105L 70/09	S170MC/70	7”	70	52	2810	1595	1215	171	170	211
S7CR105L 70/09	S190MC/70	8”	70	52	2685	1595	1090	191	193	226
S7CR105L 75/10	S170MC/75	7”	75	55	2993	1723	1270	171	170	222
S7CR105L 75/10	S190MC/75	8”	75	55	2853	1723	1130	191	193	237
S7CR105L 80/11	S190MC/80	8”	80	60	3041	1851	1190	191	193	247
S7CR105L 90/12	S190MC/90	8”	90	67	3239	1979	1260	191	193	272
S7CR105L 100/13	S190MC/100	8”	100	75	3467	2107	1360	191	193	295
S7CR105L 100/14	S190MC/100	8”	100	75	3595	2235	1360	191	193	299
S7CR105L 110/15	S190MC/110	8”	110	81	3803	2363	1440	191	193	318
S7CR105L 125/16	S190MC/125	8”	125	92	4021	2491	1530	191	193	342
S7CR105L 125/17	S190MC/125	8”	125	92	4149	2619	1530	191	193	346
S7CR105L 150/18	S190MC/150	10”	150	110	4337	2747	1590	191	240	363
S7CR105L 150/19	S190MC/150	10”	150	110	4465	2875	1590	191	240	367
S7CR105L 150/20	S190MC/150	10”	150	110	4593	3003	1590	191	240	371

Pompa Tipi *Pump Type*	Motor				Ölçüler / *Dimensions (mm)*					Toplam Ağırlık *Total Weight (kg)*
	Tipi *Type*	Ø	HP	kW	Boy / *Length*			Çap / *Dia*		
					A	B	C	D	E	
S8CR135G 10/01-1	S145MC/07	6”	10	7,5	1291	666	625	210	145	77
S8CR135G 15/01	S145MC/15	6”	15	11	1416	666	750	210	145	92
S8CR135G 17/02-2	S145MC/17	6”	17,5	13	1622	822	800	210	145	104
S8CR135G 25/02-1	S145MC/25	6”	25	18,5	1752	822	930	210	145	119
S8CR135G 30/02	S145MC/30	6”	30	22	1832	822	1010	210	145	128
S8CR135G 30/03-2	S145MC/30	6”	30	22	1988	978	1010	210	145	135
S8CR135G 40/03-1	S145MC/40	6”	40	30	2078	978	1100	210	145	145
S8CR135G 50/03	S190MC/50	8”	50	37	1968	978	990	210	193	183
S8CR135G 50/04-2	S190MC/50	8”	50	37	2124	1134	990	210	193	190
S8CR135G 60/04-1	S190MC/60	8”	60	45	2194	1134	1060	210	193	205
S8CR135G 60/04	S190MC/60	8”	60	45	2194	1134	1060	210	193	205
S8CR135G 60/05-2	S190MC/60	8”	60	45	2290	1230	1060	210	193	213
S8CR135G 60/05-1	S190MC/60	8”	60	45	2350	1290	1060	210	193	213
S8CR135G 75/05	S190MC/75	8”	75	55	2460	1290	1170	210	193	235
S8CR135G 75/06-2	S190MC/75	8”	75	55	2616	1446	1170	210	193	242
S8CR135G 75/06-1	S190MC/75	8”	75	55	2616	1446	1170	210	193	242
S8CR135G 85/06	S190MC/85	8”	85	63	2696	1446	1250	210	193	255
S8CR135G 90/07-1	S190MC/90	8”	90	67	2902	1602	1300	210	193	279
S8CR135G 100/07	S190MC/100	8”	100	75	2952	1602	1350	210	193	288
S8CR135G 100/08-2	S190MC/100	8”	100	75	3108	1758	1350	210	193	295
S8CR135G 100/08-1	S190MC/100	8”	100	75	3108	1758	1350	210	193	295
S8CR135G 110/08	S190MC/110	8”	110	81	3158	1758	1400	210	193	307
S8CR135G 125/09-2	S190MC/125	8”	125	92	3384	1914	1470	210	193	333
S8CR135G 125/09-1	S190MC/125	8”	125	92	3384	1914	1470	210	193	333
S8CR135G 125/09	S190MC/125	8”	125	92	3384	1914	1470	210	193	333
S8CR135G 150/10-1	S250MC/150	10”	150	110	3560	2070	1490	210	240	460
S8CR135G 150/10	S250MC/150	10”	150	110	3560	2070	1490	210	240	460
S8CR135G 150/11	S250MC/150	10”	150	110	3710	2220	1490	210	240	467
S8CR135G 180/12	S250MC/180	10”	180	130	4080	2380	1700	210	240	525
S8CR135G 180/13	S250MC/180	10”	180	130	4240	2540	1700	210	240	533
S8CR135G 200/14	S250MC/200	10”	200	150	4505	2700	1805	210	240	570
S8CR135G 200/15	S250MC/200	10”	200	150	4655	2850	1805	210	240	577
S8CR135G 230/16	S250MC/230	10”	230	170	4916	3006	1910	210	240	636
S8CR135G 230/17	S250MC/230	10”	230	170	5072	3162	1910	210	240	644
S8CR135G 250/18	S250MC/250	10”	250	185	5383	3318	2065	210	240	671

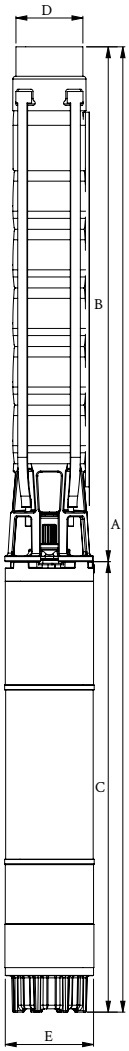

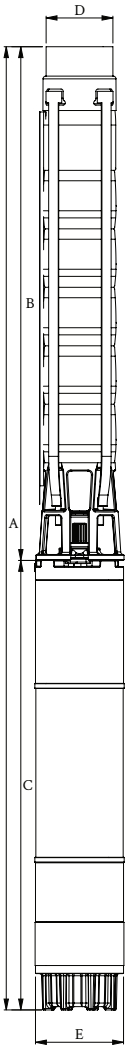

Pompa Tipi *Pump Type*	Motor				Ölçüler / *Dimensions (mm)*					Toplam Ağırlık *Total Weight (kg)*
	Tipi *Type*	Ø	HP	kW	Boy / *Length*			Çap / *Dia*		
					A	B	C	D	E	
S8CR160H 17/01	S145MC/17	6”	17,5	13	1466	666	800	210	145	97
S8CR160H 25/02-2	S145MC/25	6”	25	18,5	1752	822	930	210	145	119
S8CR160H 30/02-1	S145MC/30	6”	30	22	1832	822	1010	210	145	128
S8CR160H 35/02	S145MC/35	6”	35	26	1872	822	1050	210	145	132
S8CR160H 40/03-2	S145MC/40	6”	40	30	2078	978	1100	210	145	146
S8CR160H 50/03-1	S190MC/50	8”	50	37	1968	978	990	210	193	183
S8CR160H 50/03	S190MC/50	8”	50	37	1968	978	990	210	193	183
S8CR160H 60/04-2	S190MC/60	8”	60	45	2254	1194	1060	210	193	206
S8CR160H 60/04-1	S190MC/60	8”	60	45	2194	1134	1060	210	193	206
S8CR160H 75/04	S190MC/75	8”	75	55	2304	1134	1170	210	193	228
S8CR160H 75/05-2	S190MC/75	8”	75	55	2460	1290	1170	210	193	235
S8CR160H 75/05-1	S190MC/75	8”	75	55	2460	1290	1170	210	193	235
S8CR160H 85/05	S190MC/85	8”	85	63	2540	1290	1250	210	193	248
S8CR160H 85/06-2	S190MC/85	8”	85	63	2690	1440	1250	210	193	258
S8CR160H 100/06-1	S190MC/100	8”	100	75	2790	1440	1350	210	193	281
S8CR160H 100/06	S190MC/100	8”	100	75	2790	1440	1350	210	193	281
S8CR160H 125/07-1	S190MC/125	8”	125	92	3072	1602	1470	210	193	319
S8CR160H 125/07	S190MC/125	8”	125	92	3072	1602	1470	210	193	319
S8CR160H 125/08	S190MC/125	8”	125	92	3228	1758	1470	210	193	326
S8CR160H 150/09	S250MC/150	10”	150	110	3404	1914	1490	210	240	452
S8CR160H 180/10	S250MC/180	10”	180	130	3770	2070	1700	210	240	511
S8CR160H 180/11	S250MC/180	10”	180	130	3926	2226	1700	210	240	518
S8CR160H 200/12	S250MC/200	10”	200	150	4187	2382	1805	210	240	556
S8CR160H 250/13	S250MC/250	10”	250	185	4603	2538	2065	210	240	635
S8CR160H 250/14	S250MC/250	10”	250	185	4759	2694	2065	210	240	642
S8CR160H 250/15	S250MC/250	10”	250	185	4915	2850	2065	210	240	649
S8CR160H 250/16	S250MC/250	10”	250	185	5071	3006	2065	210	240	657

Pompa Tipi *Pump Type*	Motor				Ölçüler / *Dimensions (mm)*					Toplam Ağırlık *Total Weight (kg)*
	Tipi *Type*	Ø	HP	kW	Boy / *Length*			Çap / *Dia*		
					A	B	C	D	E	
S10CR200I 20/01-1	S145MC/20	6”	20	15	1640	790	850	232	145	123
S10CR200I 25/01	S145MC/25	6”	25	18,5	1720	790	930	232	145	132
S10CR200I 40/02-2	S145MC/40	6”	40	30	1860	760	1100	232	145	162
S10CR200I 50/02-1	S190MC/50	8”	50	37	1750	760	990	232	193	198
S10CR200I 60/02	S190MC/60	8”	60	45	1820	760	1060	232	193	214
S10CR200I 60/03-3	S190MC/60	8”	60	45	2200	1140	1060	232	193	225
S10CR200I 70/03-2	S190MC/70	8”	70	52	2270	1140	1130	232	193	240
S10CR200I 75/03-1	S190MC/75	8”	75	55	2310	1140	1170	232	193	247
S10CR200I 85/03	S190MC/85	8”	85	63	2390	1140	1250	232	193	260
S10CR200I 90/04-3	S190MC/90	8”	90	67	2610	1310	1300	232	193	287
S10CR200I 90/04-2	S190MC/90	8”	90	67	2610	1310	1300	232	193	287
S10CR200I 100/04-1	S190MC/100	8”	100	75	2660	1310	1350	232	193	296
S10CR200I 100/04	S190MC/100	8”	100	75	2660	1310	1350	232	193	296
S10CR200I 110/05-3	S190MC/110	8”	110	81	2890	1490	1400	232	193	319
S10CR200I 125/05-2	S190MC/125	8”	125	92	2960	1490	1470	232	193	338
S10CR200I 125/05	S190MC/125	8”	125	92	2960	1490	1470	232	193	338
S10CR200I 150/06-3	S250MC/150	10”	150	110	3160	1670	1490	232	240	468
S10CR200I 150/06-2	S250MC/150	10”	150	110	3160	1670	1490	232	240	468
S10CR200I 150/06-1	S250MC/150	10”	150	110	3160	1670	1490	232	240	468
S10CR200I 150/06	S250MC/150	10”	150	110	3160	1670	1490	232	240	468
S10CR200I 180/07-3	S250MC/180	10”	180	130	3550	1850	1700	232	240	530
S10CR200I 180/07-2	S250MC/180	10”	180	130	3550	1850	1700	232	240	530
S10CR200I 180/07-1	S250MC/180	10”	180	130	3550	1850	1700	232	240	530
S10CR200I 180/07	S250MC/180	10”	180	130	3550	1850	1700	232	240	530
S10CR200I 180/08-2	S250MC/180	10”	180	130	3720	2020	1700	232	240	544
S10CR200I 180/08-1	S250MC/180	10”	180	130	3720	2020	1700	232	240	544
S10CR200I 180/08	S250MC/180	10”	180	130	3720	2020	1700	232	240	544
S10CR200I 200/09-2	S250MC/200	10”	200	150	3995	2190	1805	232	240	584
S10CR200I 200/09-1	S250MC/200	10”	200	150	3995	2190	1805	232	240	584
S10CR200I 200/09	S250MC/200	10”	200	150	3995	2190	1805	232	240	584
S10CR200I 250/10-2	S250MC/250	10”	250	185	4425	2360	2065	232	240	665
S10CR200I 250/10-1	S250MC/250	10”	250	185	4425	2360	2065	232	240	665
S10CR200I 250/10	S250MC/250	10”	250	185	4425	2360	2065	232	240	665
S10CR250I 25/01	S145MC/25	6”	25	18,5	1728	798	930	232	145	129
S10CR250I 60/02	S190MC/60	8”	60	45	2036	976	1060	232	193	212
S10CR250I 85/03	S190MC/85	8”	85	63	2404	1154	1250	232	193	259
S10CR250I 125/04	S190MC/125	8”	125	92	2802	1332	1470	232	193	327
S10CR250I 150/05	S250MC/150	10”	150	110	3000	1510	1490	232	240	458
S10CR250I 180/06	S250MC/180	10”	180	130	3388	1688	1700	232	240	521
S10CR250I 200/07	S250MC/200	10”	200	150	3671	1866	1805	232	240	563
S10CR250I 250/08	S250MC/250	10”	250	185	4109	2044	2065	232	240	647

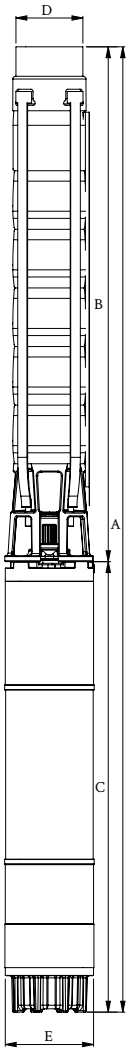

Pompa Tipi *Pump Type*	Motor			Kad. Sayısı *Stage No.*	Pompa Çıkışı *Pump Outlet*	Ø max *(mm)*	Basma Yüksekliği / *Head (m)*								
	Ø	HP	kW				0 *(l/s)*	0,25	0,5	0,75	1,0	1,25	1,5	1,75	1,78
							0 *(m³/h)*	0,9	1,8	2,7	3,6	4,5	5,4	6,3	6,41
S4CR5C 01/08	4”	1	0,75	8	1 1/2”	96	47	44	40	38	35	29	22	20	18
S4CR5C 1,5/10	4”	1,5	1,1	10	1 1/2”	96	59	56	51	47	45	36	27	25	23
S4CR5C 1,5/12	4”	1,5	1,1	12	1 1/2”	96	71	67	61	56	53	43	33	30	28
S4CR5C 02/15	4”	2	1,5	15	1 1/2”	96	89	84	76	70	66	54	41	38	35
S4CR5C 02/17	4”	2	1,5	17	1 1/2”	96	100	95	86	80	75	61	46	43	40
S4CR5C 03/21	4”	3	2,2	21	1 1/2”	96	124	117	107	99	93	76	57	53	49
S4CR5C 03/25	4”	3	2,2	25	1 1/2”	96	148	140	128	118	110	90	68	63	59
S4CR5C 04/30	4”	4	3	30	1 1/2”	96	177	168	156	141	135	111	86	76	70
S4CR5C 04/33	4”	4	3	33	1 1/2”	96	195	184	168	155	145	118	94	83	76
S4CR5C 04/36	4”	4	3	36	1 1/2”	96	213	201	183	169	158	129	103	91	83
S4CR5C 05/38	4-6”	5,5	4	38	1 1/2”	96/145	224	212	193	179	167	136	108	96	89
S4CR5C 05/41	4-6”	5,5	4	41	1 1/2”	96/145	242	230	213	196	184	152	116	107	100
S4CR5C 05/44	4-6”	5,5	4	44	1 1/2”	96/145	260	246	229	211	198	163	125	115	107
S4CR5C 07/48	4-6”	7,5	5,5	48	1 1/2”	96/145	284	269	250	231	216	178	136	126	117
S4CR5C 07/52	4-6”	7,5	5,5	52	1 1/2”	96/145	308	291	271	249	234	192	148	136	126
S4CR5C 07/56	4-6”	7,5	5,5	56	1 1/2”	96/145	331	313	292	269	252	207	160	146	136
S4CR5C 07/60	4-6”	7,5	5,5	60	1 1/2”	96/145	355	336	312	288	270	222	171	157	145
S4CR5C 10/65	4-6”	10	7,5	65	1 1/2”	96/145	385	364	338	313	293	240	185	170	157
S4CR5C 10/70	4-6”	10	7,5	70	1 1/2”	96/145	414	392	365	337	315	259	200	183	170
S4CR5C 10/75[1)]	4-6”	10	7,5	75	1 1/2”	138/145	444	420	390	360	338	278	214	196	182
S4CR5C 10/80[1)]	4-6”	10	7,5	80	1 1/2”	138/145	473	448	416	385	360	296	228	210	195
S4CR5C 10/85[1)]	4-6”	10	7,5	85	1 1/2”	138/145	503	476	442	408	383	315	242	223	206

[1)]Kılıflı pompa /
[1)]Pump in sleeve

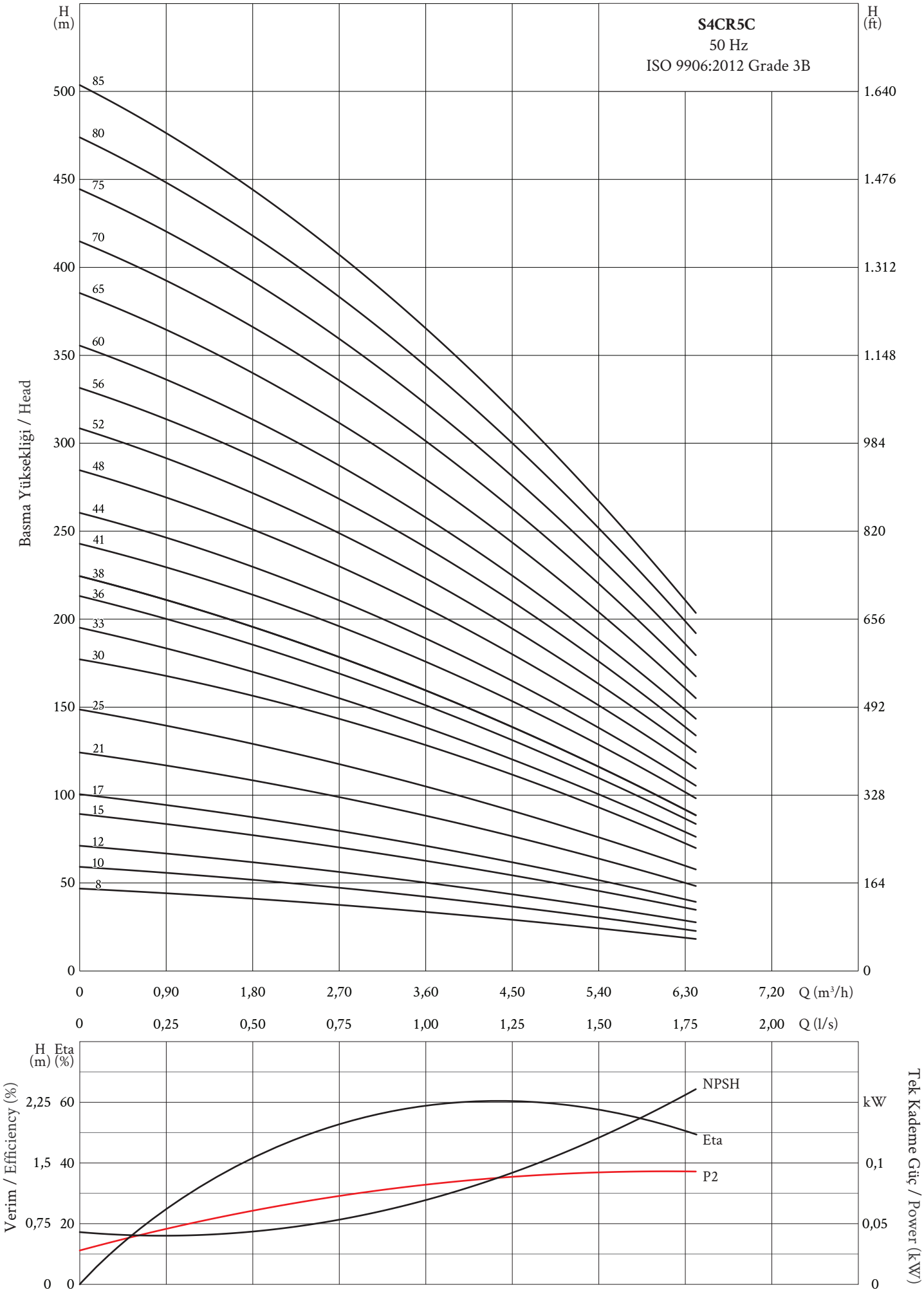

Pompa Tipi *Pump Type*	Motor			Kad. Sayısı *Stage No.*	Pompa Çıkışı *Pump Outlet*	Ø max *(mm)*	Basma Yüksekliği / *Head (m)*								
	Ø	HP	kW				0 *(l/s)*	0,8	1,1	1,7	1,9	2,2	2,5	2,8	3,1
							0 *(m³/h)*	3,0	4,0	6,0	7,0	8,0	9,0	10,0	11,0
S4CR8D 01/05	4”	1	0,75	5	2”	96	30	27	26	24	23	22	20	18	14
S4CR8D 1,5/07	4”	1,5	1,1	7	2”	96	40	37	36	33	31	30	29	27	20
S4CR8D 02/10	4”	2	1,5	10	2”	96	60	52	51	48	45	42	40	32	28
S4CR8D 03/12	4”	3	2,2	12	2”	96	72	64	62	60	56	50	48	40	30
S4CR8D 03/15	4”	3	2,2	15	2”	96	90	80	78	72	70	64	58	49	40
S4CR8D 04/18	4”	4	3	18	2”	96	110	97	92	86	80	79	70	60	48
S4CR8D 05/21	4-6”	5,5	4	21	2”	96/145	128	112	110	100	98	90	80	70	57
S4CR8D 05/23	4-6”	5,5	4	23	2”	96/145	140	124	119	110	105	100	88	75	60
S4CR8D 05/25	4-6”	5,5	4	25	2”	96/145	150	132	129	119	112	108	95	80	64
S4CR8D 05/27	4-6”	5,5	4	27	2”	96/145	168	141	139	130	125	117	102	89	70
S4CR8D 07/30	4-6”	7,5	5,5	30	2”	96/145	181	160	152	140	132	124	110	95	74
S4CR8D 07/34	4-6”	7,5	5,5	34	2”	96/145	202	177	168	150	145	135	120	100	80
S4CR8D 07/37	4-6”	7,5	5,5	37	2”	96/145	220	197	189	170	160	150	132	110	88
S4CR8D 10/41	4-6”	10	7,5	41	2”	96/145	245	210	200	184	172	160	144	120	98
S4CR8D 10/44	4-6”	10	7,5	44	2”	96/145	264	233	222	200	190	180	158	130	105
S4CR8D 10/47	4-6”	10	7,5	47	2”	96/145	284	248	233	210	200	188	166	140	110
S4CR8D 10/50	4-6”	10	7,5	50	2”	96/145	300	262	250	227	218	200	180	150	115
S4CR8D 12/55	6”	12,5	9	55	2”	145	330	284	270	247	234	219	191	160	125
S4CR8D 12/58	6”	12,5	9	58	2”	145	350	304	290	265	250	235	210	174	134
S4CR8D 12/62	6”	12,5	9	62	2”	145	377	322	307	280	268	248	220	185	147
S4CR8D 15/66	6”	15	11	66	2”	145	394	348	330	300	286	267	235	198	154
S4CR8D 15/70[1)]	6”	15	11	70	2”	145	419	360	342	314	297	275	240	204	160
S4CR8D 15/73[1)]	6”	15	11	73	2”	145	435	380	362	330	314	290	260	214	164
S4CR8D 17/78[1)]	6”	17,5	13	78	2”	145	463	400	380	350	330	305	270	227	180
S4CR8D 17/82[1)]	6”	17,5	13	82	2”	145	490	430	410	374	355	330	295	242	190
S4CR8D 20/87[1)]	6”	20	15	87	2”	145	517	450	430	390	370	345	305	260	205
S4CR8D 20/91[1)]	6”	20	15	91	2”	145	545	480	458	418	396	369	330	274	212
S4CR8D 20/95[1)]	6”	20	15	95	2”	145	570	498	470	430	410	378	334	282	220
S4CR8D 20/100[1)]	6”	20	15	100	2”	145	598	525	500	452	432	400	355	298	230

[1)]Kılıflı pompa /
[1)]Pump in sleeve

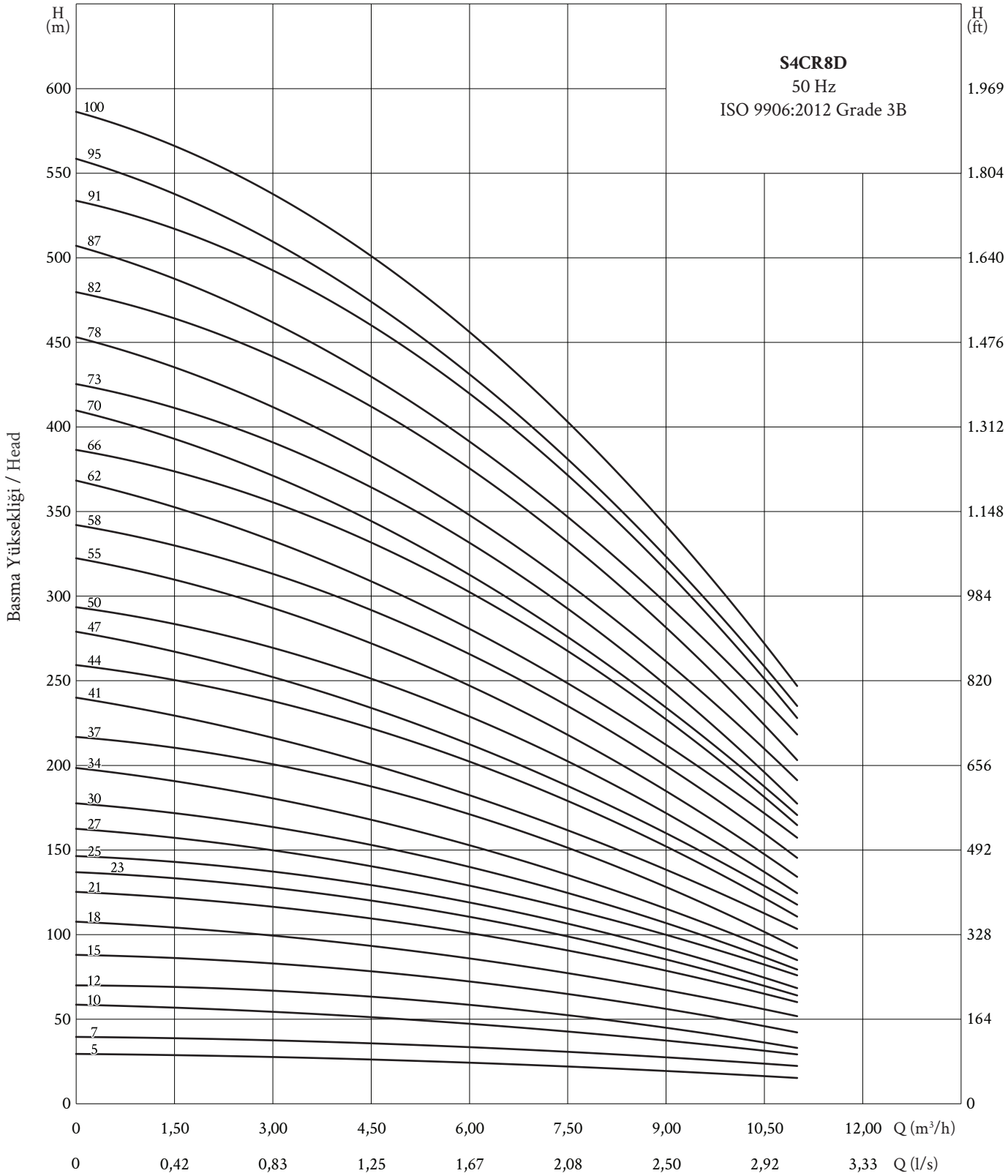

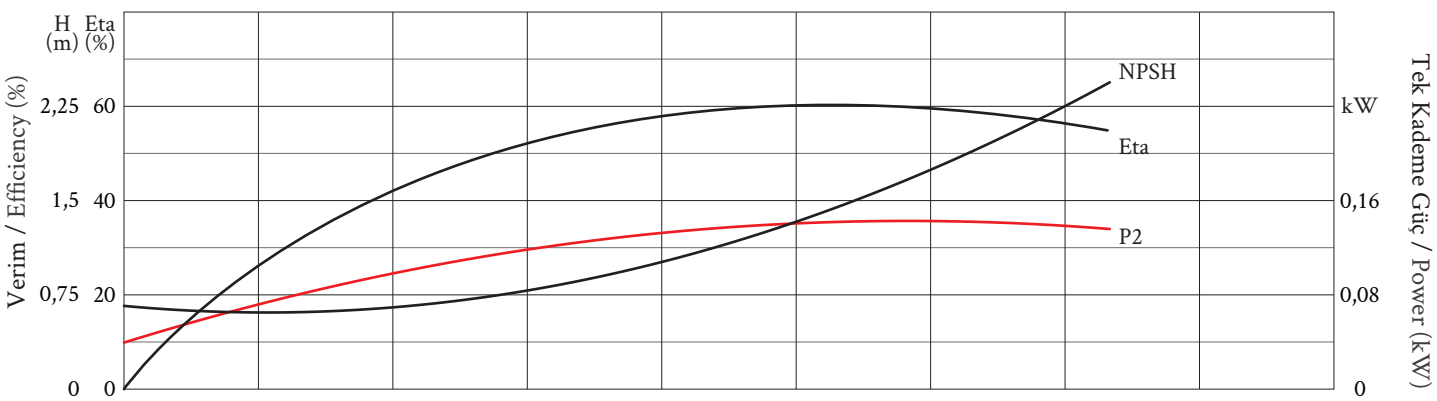

Pompa Tipi *Pump Type*	Motor			Kad. Sayısı *Stage No.*	Pompa Çıkışı *Pump Outlet*	Ø max *(mm)*	Basma Yüksekliği / *Head (m)*								
	Ø	HP	kW				0 *(l/s)*	1,1	1,7	2,2	2,8	3,3	3,9	4,4	5,0
							0 *(m³/h)*	4,0	6,0	8,0	10,0	12,0	14,0	16,0	18,0
S4CR14E 02/05	4”	2	1,5	5	2”	96	34	32	31	29	27	25	22	18	14
S4CR14E 03/06	4”	3	2,2	6	2”	96	42	40	38	36	34	32	28	23	16
S4CR14E 03/07	4”	3	2,2	7	2”	96	47	45	44	42	40	37	32	26	20
S4CR14E 04/08	4”	4	3	8	2”	96	55	53	51	48	45	41	36	30	22
S4CR14E 04/09	4”	4	3	9	2”	96	61	59	56	54	50	48	40	34	25
S4CR14E 04/10	4”	4	3	10	2”	96	68	66	63	60	56	52	46	38	28
S4CR14E 04/11	4”	4	3	11	2”	96	75	72	69	66	62	57	50	42	31
S4CR14E 05/12	4-6”	5,5	4	12	2”	96/145	82	79	75	71	66	62	55	46	34
S4CR14E 05/13	4-6”	5,5	4	13	2”	96/145	88	86	82	78	73	67	60	48	36
S4CR14E 05/14	4-6”	5,5	4	14	2”	96/145	94	92	88	84	79	72	64	52	40
S4CR14E 07/15	4-6”	7,5	5,5	15	2”	96/145	99	98	94	89	84	78	68	56	43
S4CR14E 07/16	4-6”	7,5	5,5	16	2”	96/145	105	103	100	94	89	83	73	60	45
S4CR14E 07/17	4-6”	7,5	5,5	17	2”	96/145	112	110	106	101	96	88	78	63	48
S4CR14E 07/18	4-6”	7,5	5,5	18	2”	96/145	120	118	113	107	101	94	83	68	51
S4CR14E 10/19	4-6”	10	7,5	19	2”	96/145	129	124	118	112	106	98	88	73	55
S4CR14E 10/20	4-6”	10	7,5	20	2”	96/145	135	130	124	118	112	102	92	76	58
S4CR14E 10/21	4-6”	10	7,5	21	2”	96/145	141	136	130	124	117	108	96	79	59
S4CR14E 10/22	4-6”	10	7,5	22	2”	96/145	148	143	136	128	122	112	100	82	61
S4CR14E 10/23	4-6”	10	7,5	23	2”	96/145	154	149	142	134	126	116	103	84	62
S4CR14E 10/24	4-6”	10	7,5	24	2”	96/145	162	156	148	140	132	122	108	89	64
S4CR14E 10/25	4-6”	10	7,5	25	2”	96/145	169	164	156	148	140	130	114	94	70

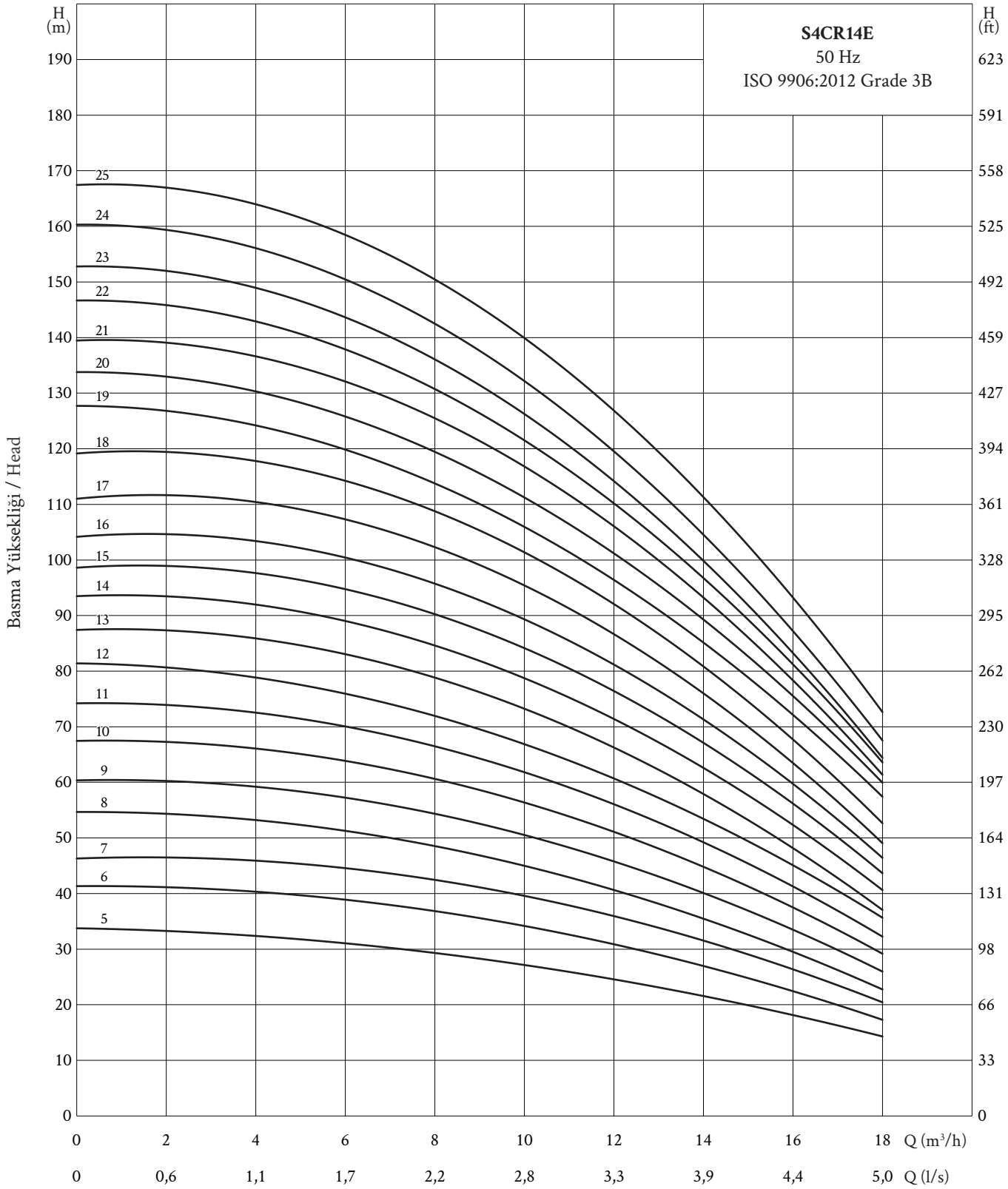

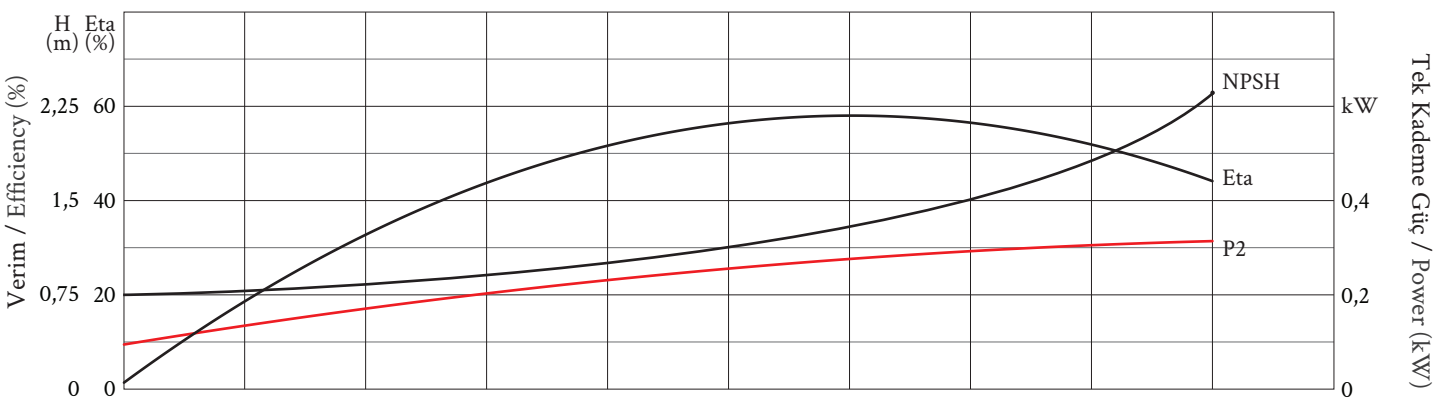

Pompa Tipi *Pump Type*	Motor			Kad. Sayısı *Stage No.*	Pompa Çıkışı *Pump Outlet*	Ø max *(mm)*	Basma Yüksekliği / *Head (m)*								
	Ø	HP	kW				0 *(l/s)*	1,0	2,0	2,5	3,0	3,5	4,0	4,5	5,0
							0 *(m³/h)*	3,6	7,2	9,0	10,8	12,6	14,4	16,2	18,0
S6CR10L 01/02	4”	1	0,75	2	3”	134	19	18	17	16	15	13	11	9	7
S6CR10L 1,5/03	4”	1,5	1,1	3	3”	134	28	27	25	24	22	20	17	13	10
S6CR10L 02/04	4”	2	1,5	4	3”	134	38	36	34	32	30	27	23	18	13
S6CR10L 03/05	4”	3	2,2	5	3”	134	47	45	42	40	37	33	29	22	17
S6CR10L 03/06	4”	3	2,2	6	3”	134	57	54	51	48	45	40	34	26	21
S6CR10L 04/07	4”	4	3	7	3”	134	67	63	60	56	53	47	40	31	24
S6CR10L 04/08	4”	4	3	8	3”	134	76	72	68	64	60	54	46	35	28
S6CR10L 05/09	6”	5,5	4	9	3”	145	86	81	77	72	68	60	51	40	31
S6CR10L 05/10	6”	5,5	4	10	3”	145	95	90	85	80	75	67	57	44	35
S6CR10L 07/11	6”	7,5	5,5	11	3”	145	105	99	94	88	83	74	63	49	37
S6CR10L 07/12	6”	7,5	5,5	12	3”	145	114	108	102	96	90	81	69	53	40
S6CR10L 07/13	6”	7,5	5,5	13	3”	145	125	120	114	108	101	92	78	60	44
S6CR10L 07/14	6”	7,5	5,5	14	3”	145	134	127	120	113	107	95	81	63	48
S6CR10L 10/15	6”	10	7,5	15	3”	145	143	136	129	122	114	102	87	68	51
S6CR10L 10/16	6”	10	7,5	16	3”	145	152	145	137	129	121	108	93	72	55
S6CR10L 10/17	6”	10	7,5	17	3”	145	161	154	146	137	129	115	99	76	58
S6CR10L 10/18	6”	10	7,5	18	3”	145	171	164	155	145	137	122	104	81	61
S6CR10L 10/19	6”	10	7,5	19	3”	145	180	173	163	154	145	129	110	86	65
S6CR10L 10/20	6”	10	7,5	20	3”	145	190	182	173	164	153	140	116	90	68
S6CR10L 10/21	6”	10	7,5	21	3”	145	200	191	180	170	160	143	121	94	71
S6CR10L 12/22	6”	12,5	9	22	3”	145	209	200	189	178	167	150	127	99	74
S6CR10L 12/23	6”	12,5	9	23	3”	145	218	208	200	190	175	155	135	105	78
S6CR10L 12/24	6”	12,5	9	24	3”	145	228	218	206	194	182	163	139	108	81
S6CR10L 12/25	6”	12,5	9	25	3”	145	238	227	215	202	190	170	145	113	85
S6CR10L 12/26	6”	12,5	9	26	3”	145	247	236	223	210	198	177	151	117	89
S6CR10L 15/27	6”	15	11	27	3”	145	257	246	233	219	205	184	157	121	92
S6CR10L 15/28	6”	15	11	28	3”	145	266	255	240	227	213	191	162	126	95
S6CR10L 15/29	6”	15	11	29	3”	145	275	264	250	235	221	197	168	130	99
S6CR10L 17/30	6”	17,5	13	30	3”	145	285	273	258	243	228	204	174	135	102
S6CR10L 17/33	6”	17,5	13	33	3”	145	314	300	284	267	251	225	191	148	112
S6CR10L 17/35	6”	17,5	13	35	3”	145	333	318	301	284	266	238	203	157	119
S6CR10L 20/37	6”	20	15	37	3”	145	352	336	318	300	282	252	215	166	125
S6CR10L 20/39	6”	20	15	39	3”	145	370	355	336	316	297	266	226	276	133
S6CR10L 20/41	6”	20	15	41	3”	145	390	373	353	332	311	279	238	184	140
S6CR10L 25/43	6”	25	18,5	43	3”	145	409	392	370	348	327	293	250	193	147
S6CR10L 25/45[1)]	6”	25	18,5	45	3”	171	428	410	387	365	342	306	261	202	153
S6CR10L 25/47[1)]	6”	30	22	47	3”	171	447	428	405	381	357	320	272	211	160
S6CR10L 25/49[1)]	6”	30	22	49	3”	171	465	446	421	395	372	333	284	220	167

[1)]Kılıflı pompa /
[1)]Pump in sleeve

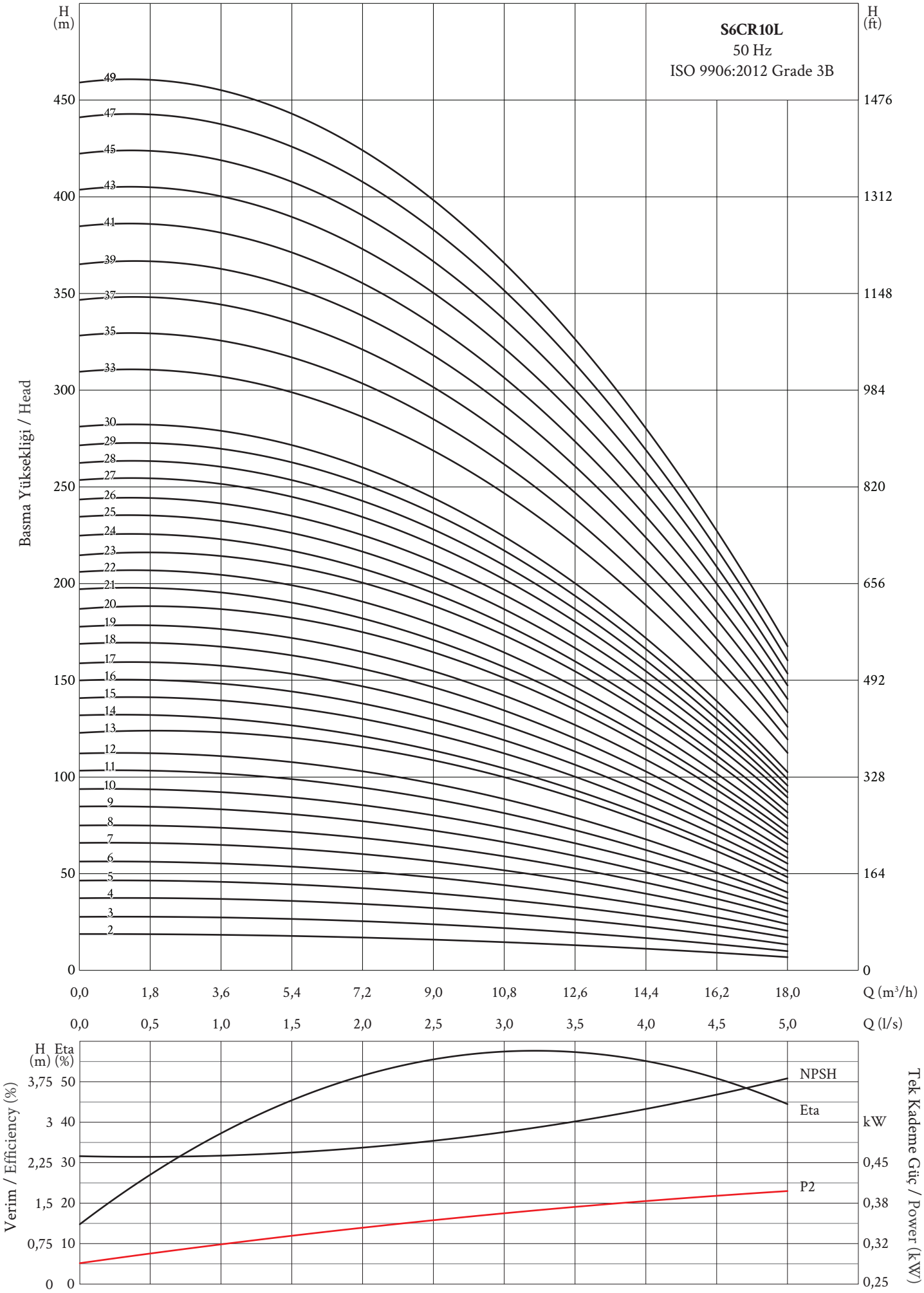

Pompa Tipi *Pump Type*	Motor			Kad. Sayısı *Stage No.*	Pompa Çıkışı *Pump Outlet*	Ø max *(mm)*	Basma Yüksekliği / *Head (m)*								
	Ø	HP	kW				0 *(l/s)*	2,0	2,5	3,0	3,5	4,0	4,5	5,0	5,5
							0 *(m³/h)*	7,2	9,0	10,8	12,6	14,4	16,2	18,0	19,8
S6CR17A 01/01	4”	1	0,75	1	3”	134	12	11	10	9	8	7	6	5	4
S6CR17A 1.5/02	4”	1,5	1,1	2	3”	134	23	21	20	18	17	14	12	10	8
S6CR17A 03/03	4”	3	2,2	3	3”	134	32	29	28	26	25	23	20	18	14
S6CR17A 03/04	4”	3	2,2	4	3”	134	44	39	37	35	33	30	27	24	21
S6CR17A 04/05	4”	4	3	5	3”	134	55	49	46	44	41	38	34	30	26
S6CR17A 05/06	6”	5,5	4	6	3”	145	67	59	56	53	49	45	41	37	32
S6CR17A 05/07	6”	5,5	4	7	3”	145	78	70	66	63	58	54	50	44	40
S6CR17A 07/08	6”	7,5	5,5	8	3”	145	89	80	76	73	68	64	58	54	48
S6CR17A 07/09	6”	7,5	5,5	9	3”	145	99	88	84	80	76	70	66	60	54
S6CR17A 07/10	6”	7,5	5,5	10	3”	145	108	98	94	90	84	78	72	66	60
S6CR17A 10/11	6”	10	7,5	11	3”	145	119	108	104	99	94	87	81	75	68
S6CR17A 10/12	6”	10	7,5	12	3”	145	133	119	114	108	102	95	88	81	74
S6CR17A 10/13	6”	10	7,5	13	3”	145	142	127	121	115	109	102	94	87	80
S6CR17A 12/14	6”	12,5	9	14	3”	145	149	137	134	127	120	112	104	96	86
S6CR17A 12/15	6”	12,5	9	15	3”	145	166	150	143	136	128	120	111	102	92
S6CR17A 12/16	6”	12,5	9	16	3”	145	175	160	153	145	137	127	118	107	94
S6CR17A 12/17	6”	12,5	9	17	3”	145	184	170	162	154	144	134	124	112	100
S6CR17A 15/18	6”	15	11	18	3”	145	198	190	184	177	164	156	140	124	108
S6CR17A 15/19	6”	15	11	19	3”	145	208	198	192	185	176	162	148	132	116
S6CR17A 15/20	6”	15	11	20	3”	145	216	208	200	192	180	168	152	136	120
S6CR17A 17/21	6”	17,5	13	21	3”	145	220	212	208	198	186	174	158	140	124
S6CR17A 17/22	6”	17,5	13	22	3”	145	232	224	216	206	192	180	164	148	128
S6CR17A 17/23	6”	17,5	13	23	3”	145	248	238	228	216	204	190	174	154	136
S6CR17A 17/24	6”	17,5	13	24	3”	145	264	246	236	224	210	196	180	162	144
S6CR17A 20/25	6”	20	15	25	3”	145	278	256	246	232	218	204	184	168	148
S6CR17A 20/26	6”	20	15	26	3”	145	288	268	256	242	228	213	194	176	159
S6CR17A 20/27	6”	20	15	27	3”	145	296	276	264	250	236	220	202	182	164
S6CR17A 25/28	6”	25	18,5	28	3”	145	306	288	278	264	248	232	212	190	170
S6CR17A 25/29	6”	25	18,5	29	3”	145	320	300	288	274	256	240	220	200	178
S6CR17A 25/30	6”	25	18,5	30	3”	145	330	312	300	286	268	250	230	208	186
S6CR17A 25/31	6”	25	18,5	31	3”	145	344	326	312	298	280	262	240	216	196
S6CR17A 25/32	6”	25	18,5	32	3”	145	352	334	320	304	288	270	248	224	200
S6CR17A 25/33	6”	25	18,5	33	3”	145	362	344	330	316	296	278	256	230	206
S6CR17A 30/34	6”	30	22	34	3”	145	374	352	340	324	304	284	260	236	212
S6CR17A 30/35	6”	30	22	35	3”	145	384	360	348	330	312	292	268	244	218
S6CR17A 30/36	6”	30	22	36	3”	145	396	374	358	342	322	300	278	250	224
S6CR17A 30/37	6”	30	22	37	3”	145	408	384	368	352	332	312	288	260	236
S6CR17A 30/38	6”	30	22	38	3”	145	418	394	380	364	344	322	296	272	244
S6CR17A 30/39	6”	30	22	39	3”	145	432	410	396	370	355	334	308	280	252
S6CR17A 30/40	6”	30	22	40	3”	145	442	420	406	388	365	344	318	292	264
S6CR17A 35/43	6”	35	26	43	3”	145	456	434	420	402	380	358	332	304	276
S6CR17A 35/45[1)]	6”	35	26	45	3”	171	468	444	428	412	392	368	342	312	286
S6CR17A 35/48[1)]	6”	35	26	48	3”	171	480	456	440	422	410	376	352	324	296
S6CR17A 40/51[1)]	6”	40	30	51	3”	171	496	468	454	440	420	390	362	336	308
S6CR17A 40/53[1)]	6”	40	30	53	3”	171	504	480	464	445	435	400	372	344	318
S6CR17A 50/55[1)]	6”	50	37	55	3”	171	520	496	481	467	450	425	397	360	320
S6CR17A 50/58[1)]	6”	50	37	58	3”	171	534	510	497	482	465	446	410	370	327
S6CR17A 50/60[1)]	6”	50	37	60	3”	171	550	525	510	495	477	450	422	382	337

[1)]Kılıflı pompa /
[1)]Pump in sleeve

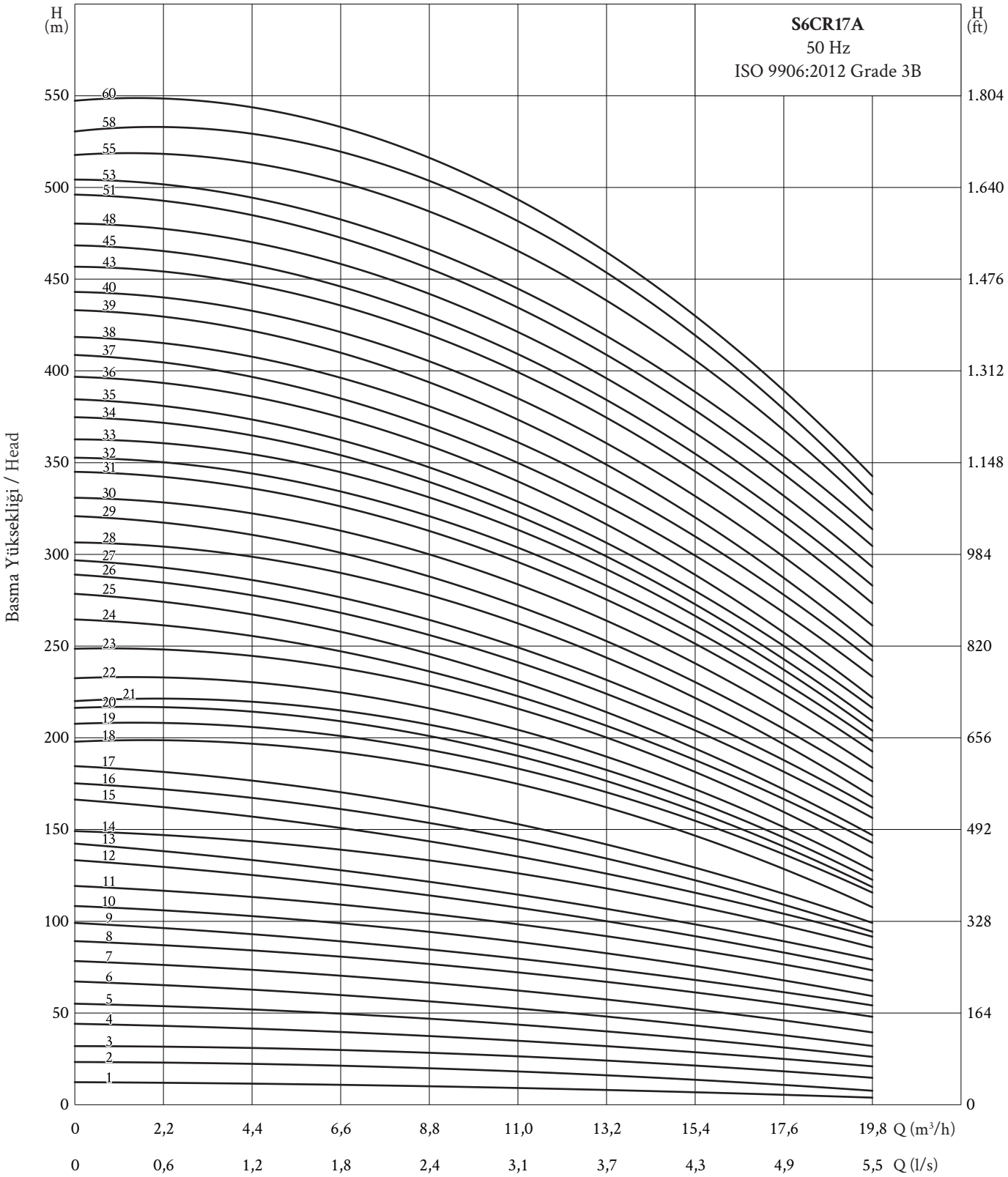

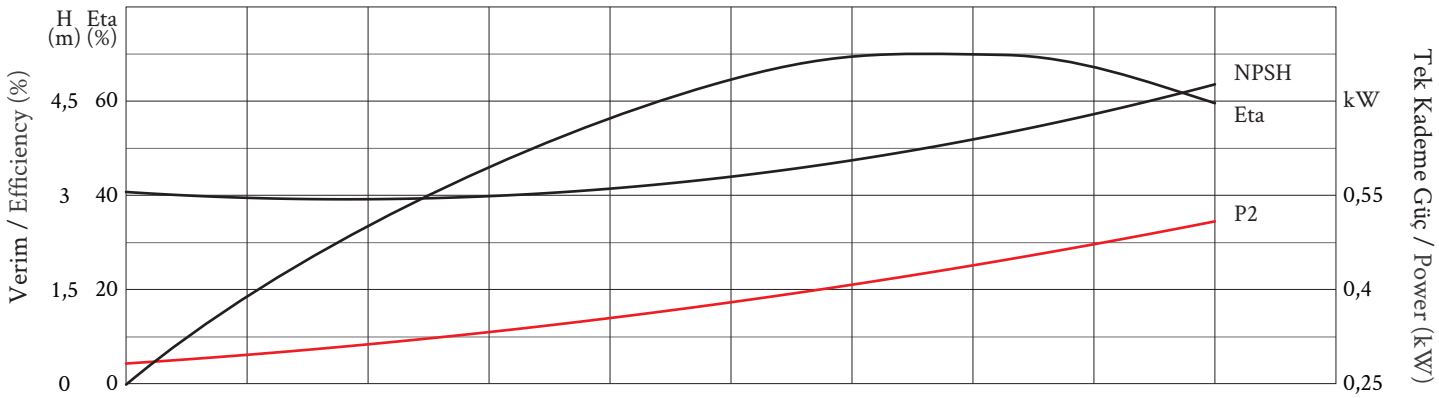

Pompa Tipi *Pump Type*	Motor			Kad. Sayısı *Stage No.*	Pompa Çıkışı *Pump Outlet*	Ø max *(mm)*	Basma Yüksekliği / *Head (m)*								
	Ø	HP	kW				0 *(l/s)*	4,0	5,0	6,0	6,5	7,0	7,5	8,0	8,5
							0 *(m³/h)*	14,4	18,0	21,6	23,4	25,2	27,0	28,8	30,6
S6CR24M 01/01	4”	1	0,75	1	3”	134	11	10	9	8	7	6	5	4	3
S6CR24M 02/02	4”	2	1,5	2	3”	134	20	18	17	15	14	12	10	8	7
S6CR24M 03/03	4”	3	2,2	3	3”	134	30	27	25	22	21	18	15	12	10
S6CR24M 04/04	4”	4	3	4	3”	134	40	37	34	29	28	25	20	17	13
S6CR24M 04/05	4”	4	3	5	3”	134	50	46	42	36	35	31	25	21	16
S6CR24M 05/06	6”	5,5	4	6	3”	145	60	55	51	47	42	37	30	25	20
S6CR24M 05/07	6”	5,5	4	7	3”	145	70	64	59	54	49	43	35	29	23
S6CR24M 07/08	6”	7,5	5,5	8	3”	145	80	73	68	61	56	49	40	33	26
S6CR24M 07/09	6”	7,5	5,5	9	3”	145	90	83	76	68	63	56	45	38	29
S6CR24M 10/10	6”	10	7,5	10	3”	145	100	92	85	82	70	62	50	42	33
S6CR24M 10/11	6”	10	7,5	11	3”	145	110	101	93	88	77	68	55	46	36
S6CR24M 12/12	6”	12,5	9	12	3”	145	120	110	102	96	84	74	60	50	40
S6CR24M 12/13	6”	12,5	9	13	3”	145	130	120	110	103	91	80	65	54	43
S6CR24M 12/14	6”	12,5	9	14	3”	145	140	129	119	108	98	87	70	59	46
S6CR24M 15/15	6”	15	11	15	3”	145	150	138	127	126	105	93	75	63	49
S6CR24M 15/16	6”	15	11	16	3”	145	160	147	136	129	112	99	80	67	53
S6CR24M 17/17	6”	17,5	13	17	3”	145	170	156	144	136	119	105	85	71	56
S6CR24M 17/18	6”	17,5	13	18	3”	145	180	166	153	140	126	111	90	76	59
S6CR24M 17/19	6”	17,5	13	19	3”	145	190	175	161	151	133	118	95	80	62
S6CR24M 20/20	6”	20	15	20	3”	145	200	184	170	158	140	124	100	84	66
S6CR24M 20/21	6”	20	15	21	3”	145	210	193	178	165	147	130	105	88	69
S6CR24M 20/22	6”	20	15	22	3”	145	220	202	187	172	154	136	110	92	73
S6CR24M 25/23	6”	25	18,5	23	3”	145	230	212	195	180	161	143	115	97	76
S6CR24M 25/24	6”	25	18,5	24	3”	145	240	221	204	187	168	149	120	100	79
S6CR24M 25/25	6”	25	18,5	25	3”	145	250	230	212	194	175	155	125	105	82
S6CR24M 25/26	6”	25	18,5	26	3”	145	260	239	221	202	182	161	130	109	86
S6CR24M 25/27	6”	25	18,5	27	3”	145	270	248	229	209	189	167	135	113	89
S6CR24M 30/28	6”	30	22	28	3”	145	280	257	238	219	196	174	140	117	92
S6CR24M 30/29	6”	30	22	29	3”	145	290	267	246	226	203	180	145	122	95
S6CR24M 30/30	6”	30	22	30	3”	145	300	276	255	235	210	186	150	126	99
S6CR24M 30/31	6”	30	22	31	3”	145	310	285	263	241	217	192	155	130	102
S6CR24M 35/32	6”	35	26	32	3”	145	320	295	272	248	224	198	160	135	105
S6CR24M 35/33	6”	35	26	33	3”	145	330	304	280	255	231	204	165	138	109
S6CR24M 35/34	6”	35	26	34	3”	145	340	313	289	263	238	210	170	142	112
S6CR24M 35/35	6”	35	26	35	3”	145	350	322	297	270	245	217	175	147	115
S6CR24M 35/36	6”	35	26	36	3”	145	360	330	306	277	252	223	180	151	118
S6CR24M 40/37	6”	40	30	37	3”	145	370	340	314	285	259	229	185	155	122
S6CR24M 40/38	6”	40	30	38	3”	145	380	349	323	292	266	235	190	159	125
S6CR24M 40/39	6”	40	30	39	3”	145	390	358	331	299	273	241	195	164	129

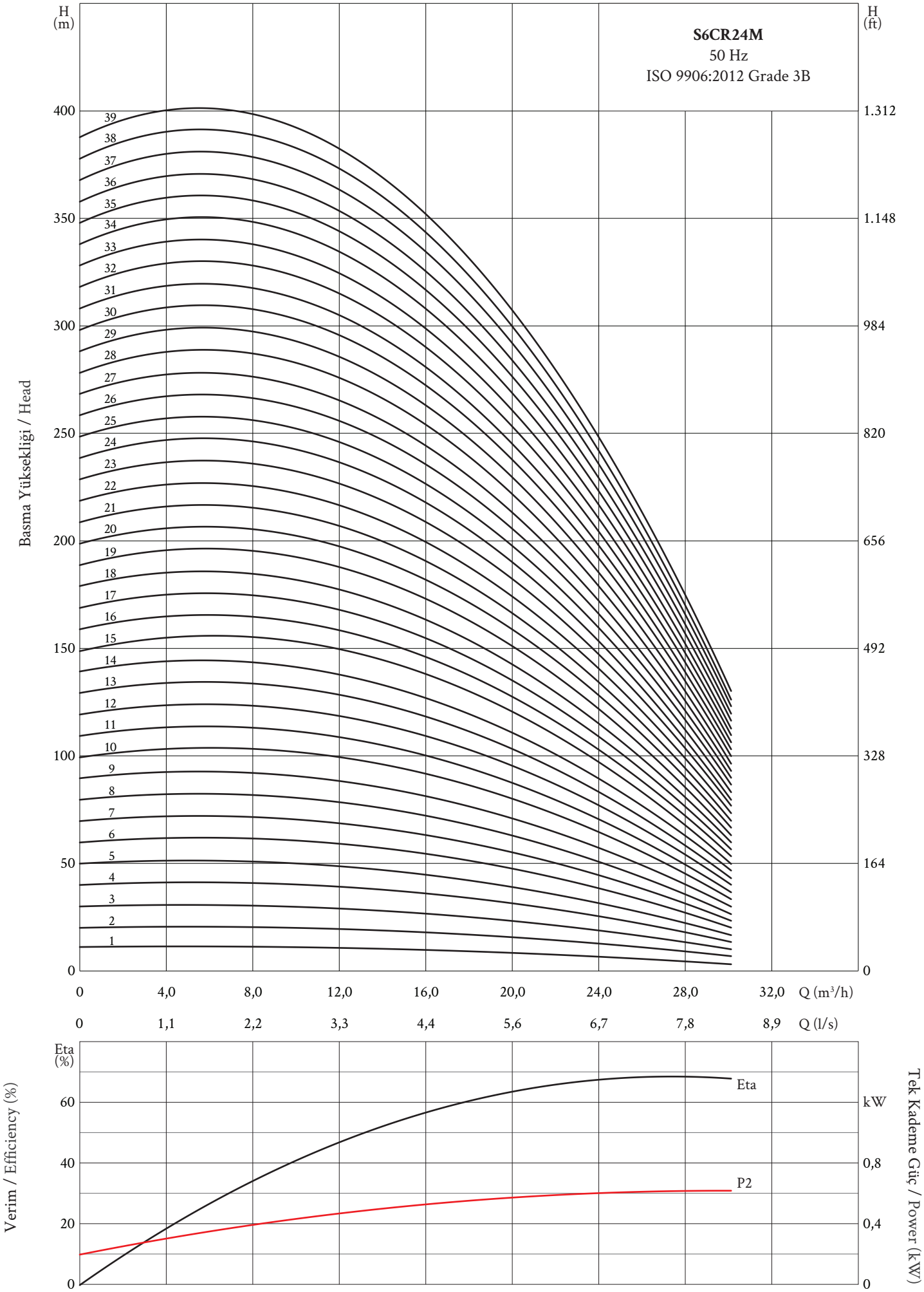

Pompa Tipi *Pump Type*	Motor			Kad. Sayısı *Stage No.*	Pompa Çıkışı *Pump Outlet*	Ø max *(mm)*	Basma Yüksekliği / *Head (m)*								
	Ø	HP	kW				0 *(l/s)*	2,0	4,0	6,0	7,0	8,0	9,0	10,0	12,0
							0 *(m³/h)*	7,2	14,4	21,6	25,2	28,8	32,4	36,0	43,2
S6CR30B 01/01-1	4”	1	0,75	1	3”	134	10	9	8	7	6	5	4	3	2
S6CR30B 1,5/01	4”	1,5	1,1	1	3”	134	12	11	10	9	8	7	6	5	3
S6CR30B 02/02-1	4”	2	1,5	2	3”	134	19	18	17	16	14	13	11	8	4
S6CR30B 03/02	4”	3	2,2	2	3”	134	22	21	19	18	16	15	13	11	5
S6CR30B 04/03	4”	4	3	3	3”	134	33	32	29	26	25	22	20	17	8
S6CR30B 05/04	6”	5,5	4	4	3”	145	44	42	39	35	33	30	26	22	10
S6CR30B 07/05	6”	7,5	5,5	5	3”	145	55	52	48	44	41	37	32	27	13
S6CR30B 07/06	6”	7,5	5,5	6	3”	145	66	63	58	53	49	44	39	33	16
S6CR30B 10/07	6”	10	7,5	7	3”	145	77	73	68	62	57	52	45	38	18
S6CR30B 10/08	6”	10	7,5	8	3”	145	88	84	78	70	66	59	52	44	21
S6CR30B 12/09	6”	12,5	9	9	3”	145	99	94	87	79	74	67	58	49	23
S6CR30B 12/10	6”	12,5	9	10	3”	145	110	105	97	88	82	74	65	55	26
S6CR30B 12/11	6”	12,5	9	11	3”	145	121	116	107	97	90	81	71	60	29
S6CR30B 15/12	6”	15	11	12	3”	145	132	126	116	106	99	89	78	66	31
S6CR30B 15/13	6”	15	11	13	3”	145	150	143	133	118	111	101	88	74	35
S6CR30B 17/14	6”	17,5	13	14	3”	145	161	154	143	127	119	109	95	80	38
S6CR30B 17/15	6”	17,5	13	15	3”	145	173	165	153	137	128	117	102	85	40
S6CR30B 20/16	6”	20	15	16	3”	145	184	176	163	146	136	125	109	91	43
S6CR30B 20/17	6”	20	15	17	3”	145	196	187	173	155	145	133	116	97	46
S6CR30B 25/18	6”	25	18,5	18	3”	145	207	198	184	164	153	140	122	103	49
S6CR30B 25/19	6”	25	18,5	19	3”	145	219	209	194	173	162	148	129	108	51
S6CR30B 25/20	6”	25	18,5	20	3”	145	230	220	204	182	170	156	136	114	54
S6CR30B 25/21	6”	25	18,5	21	3”	145	242	231	214	191	179	164	143	120	57
S6CR30B 30/22	6”	30	22	22	3”	145	253	242	224	200	187	172	150	125	59
S6CR30B 30/23	6”	30	22	23	3”	145	265	253	235	209	196	179	156	131	62
S6CR30B 30/24	6”	30	22	24	3”	145	276	264	245	218	204	187	163	137	65
S6CR30B 30/25	6”	30	22	25	3”	145	288	275	255	228	213	195	170	143	67
S6CR30B 30/26	6”	30	22	26	3”	145	299	286	265	237	221	203	177	148	70
S6CR30B 35/27	6”	35	26	27	3”	145	311	297	275	246	230	211	184	154	73
S6CR30B 35/28	6”	35	26	28	3”	145	322	308	286	255	238	218	190	160	76
S6CR30B 35/29	6”	35	26	29	3”	145	334	319	296	264	247	226	197	165	78
S6CR30B 35/30	6”	35	26	30	3”	145	345	330	306	273	255	234	204	171	81
S6CR30B 35/31	6”	35	26	31	3”	145	357	341	316	282	264	242	211	177	84
S6CR30B 40/32	6”	40	30	32	3”	145	368	352	326	291	272	250	218	182	86
S6CR30B 40/33	6”	40	30	33	3”	145	380	363	337	300	281	257	224	188	89
S6CR30B 40/34	6”	40	30	34	3”	145	391	374	347	309	289	265	231	194	92
S6CR30B 40/35	6”	40	30	35	3”	145	403	385	357	319	298	273	238	200	94
S6CR30B 50/39[1)]	6”	50	37	39	3”	171	449	429	398	355	332	304	265	222	105
S6CR30B 50/43[1)]	6”	50	37	43	3”	171	495	473	439	391	366	335	292	245	116
S6CR30B 60/46[1)]	8”	60	45	46	3”	193	529	506	469	419	391	359	313	262	124
S6CR30B 60/49[1)]	8”	60	45	49	3”	193	564	539	500	446	417	382	333	279	132
S6CR30B 75/52[1)]	8”	75	55	52	3”	193	598	572	530	473	442	406	354	296	140
S6CR30B 75/54[1)]	8”	75	55	54	3”	193	621	594	551	491	459	421	367	308	146

[1)]Kılıflı pompa /
[1)]Pump in sleeve

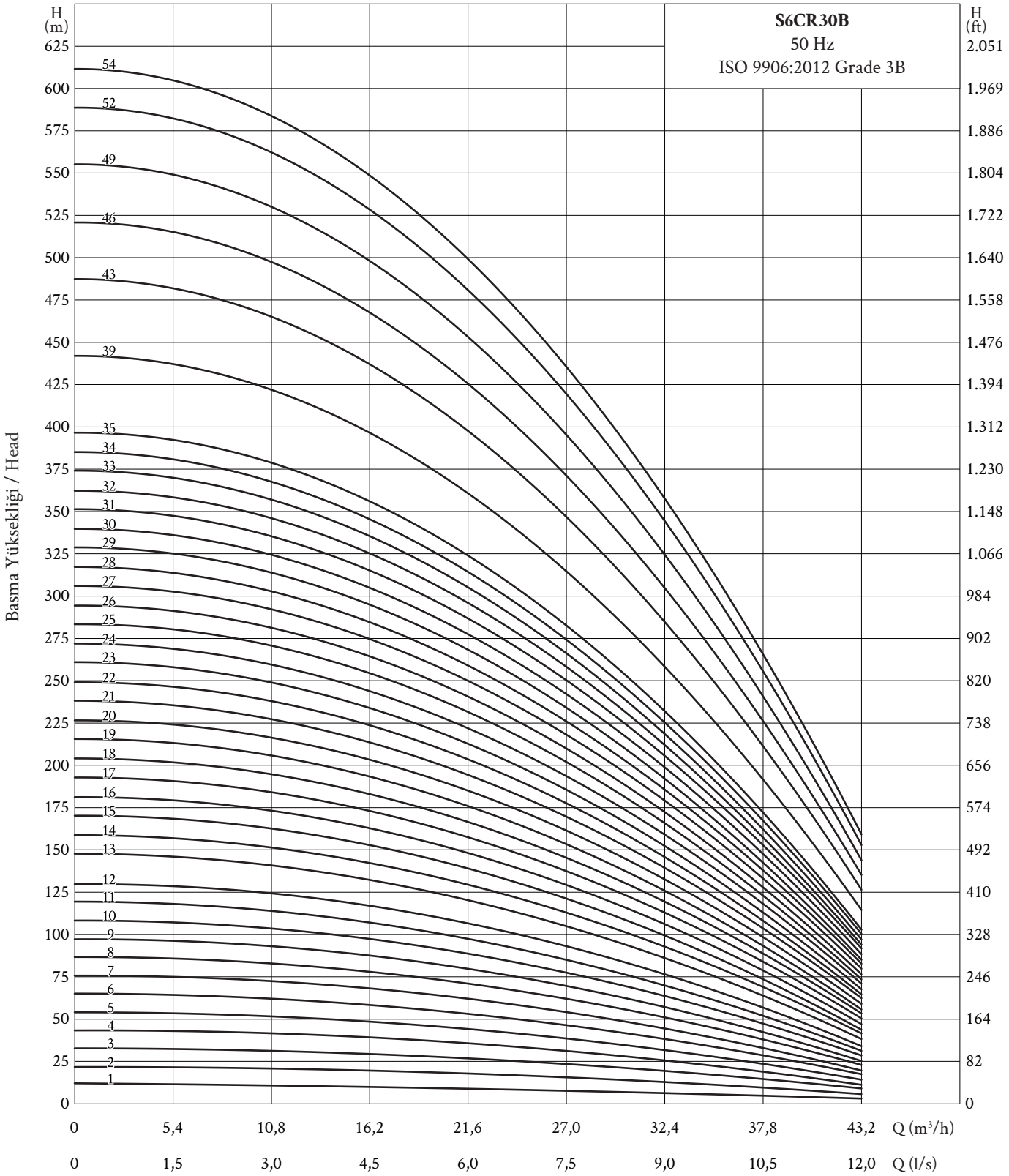

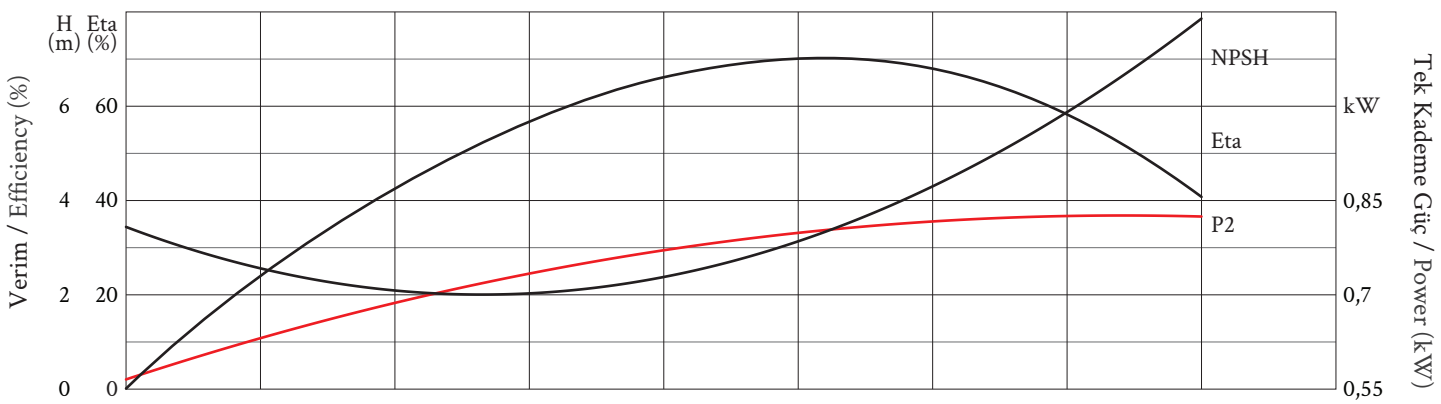

Pompa Tipi *Pump Type*	Motor			Kad. Sayısı *Stage No.*	Pompa Çıkışı *Pump Outlet*	Ø max *(mm)*	Basma Yüksekliği / *Head (m)*								
	Ø	HP	kW				0 *(l/s)*	6,0	8,0	10,0	12,0	13,0	14,0	15,0	16,0
							0 *(m³/h)*	21,6	28,8	36,0	43,2	46,8	50,4	54,0	57,6
S6CR46C 03/01	4”	3	2,2	1	3”-4”	145	13	12	11	10	9	8	7	6	5
S6CR46C 04/02	4”	4	3	2	3”-4”	145	27	24	22	21	18	16	15	13	12
S6CR46C 07/03	6”	7,5	5,5	3	3”-4”	145	41	36	33	31	27	25	22	19	17
S6CR46C 10/04	6”	10	7,5	4	3”-4”	145	55	49	45	41	36	32	30	26	23
S6CR46C 10/05	6”	10	7,5	5	3”-4”	145	68	61	56	51	46	41	38	32	29
S6CR46C 12/06	6”	12,5	9	6	3”-4”	145	82	73	67	63	55	50	46	40	36
S6CR46C 15/07	6”	15	11	7	3”-4”	145	96	85	78	73	64	59	54	46	42
S6CR46C 17/08	6”	17,5	13	8	3”-4”	145	110	97	89	83	74	67	62	53	48
S6CR46C 20/09	6”	20	15	9	3”-4”	145	122	109	100	93	83	76	70	60	54
S6CR46C 20/10	6”	20	15	10	3”-4”	145	137	122	112	105	93	85	78	67	62
S6CR46C 25/11	6”	25	18,5	11	3”-4”	145	150	134	123	115	102	93	86	74	68
S6CR46C 25/12	6”	25	18,5	12	3”-4”	145	165	146	135	126	111	103	94	82	75
S6CR46C 30/13	6”	30	22	13	3”-4”	145	179	159	146	137	121	111	102	87	81
S6CR46C 30/14	6”	30	22	14	3”-4”	145	192	171	157	147	131	119	110	94	87
S6CR46C 30/15	6”	30	22	15	3”-4”	145	205	185	168	157	141	128	118	102	95
S6CR46C 35/16	6”	35	26	16	3”-4”	145	219	195	179	168	148	139	125	107	99
S6CR46C 35/17	6”	35	26	17	3”-4”	145	232	207	190	178	158	145	132	114	105
S6CR46C 40/18	6”	40	30	18	3”-4”	145	246	219	201	189	167	153	140	120	111
S6CR46C 40/19	6”	40	30	19	3”-4”	145	260	232	213	199	177	162	148	127	117
S6CR46C 40/20	6”	40	30	20	3”-4”	145	274	244	224	210	186	170	156	134	124
S6CR46C 50/21	6”	50	37	21	3”-4”	145	288	256	235	220	195	178	164	141	130
S6CR46C 50/22	6”	50	37	22	3”-4”	145	301	268	246	231	205	187	172	147	136
S6CR46C 50/23	6”	50	37	23	3”-4”	145	315	281	258	241	214	195	179	154	142
S6CR46C 50/24	6”	50	37	24	3”-4”	145	328	292	268	252	223	204	187	160	148
S6CR46C 60/25	8”	60	45	25	3”-4”	193	342	305	280	262	232	212	195	167	155
S6CR46C 60/26	8”	60	45	26	3”-4”	193	356	317	291	273	242	221	203	174	161
S6CR46C 60/27	8”	60	45	27	3”-4”	193	370	329	302	283	251	229	211	181	167
S6CR46C 60/28	8”	60	45	28	3”-4”	193	384	342	314	294	260	238	218	188	174
S6CR46C 60/29	8”	60	45	29	3”-4”	193	397	354	325	304	270	246	226	194	180
S6CR46C 60/30	8”	60	45	30	3”-4”	193	411	366	336	315	279	255	234	201	186
S6CR46C 75/31	8”	75	55	31	3”-4”	193	425	378	347	325	288	263	242	208	192
S6CR46C 75/32	8”	75	55	32	3”-4”	193	438	390	358	336	298	272	250	214	198
S6CR46C 75/33	8”	75	55	33	3”-4”	193	452	403	370	346	307	280	257	221	205
S6CR46C 75/34	8”	75	55	34	3”-4”	193	466	415	381	357	316	289	265	228	211
S6CR46C 75/35[1)]	8”	75	55	35	3”-4”	193	479	427	392	367	325	297	273	234	217
S6CR46C 85/36[1)]	8”	85	63	36	3”-4”	193	493	439	403	378	335	306	281	241	223
S6CR46C 85/37[1)]	8”	85	63	37	3”-4”	193	507	451	414	388	344	314	289	248	229
S6CR46C 85/38[1)]	8”	85	63	38	3”-4”	193	521	464	426	399	353	323	296	255	236
S6CR46C 85/39[1)]	8”	85	63	39	3”-4”	193	534	476	437	409	363	331	304	261	242

[1)]Kılıflı pompa /
[1)]Pump in sleeve

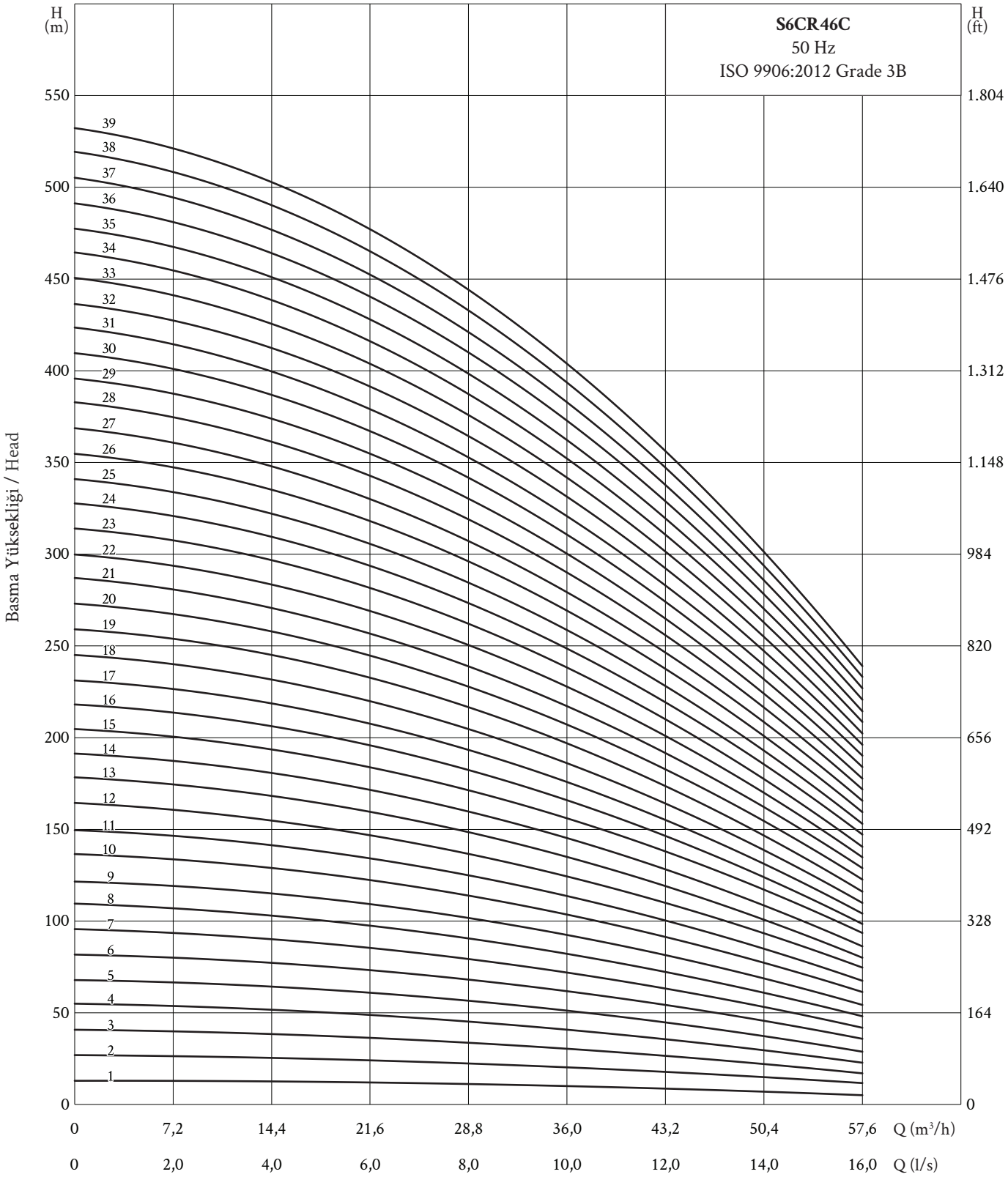

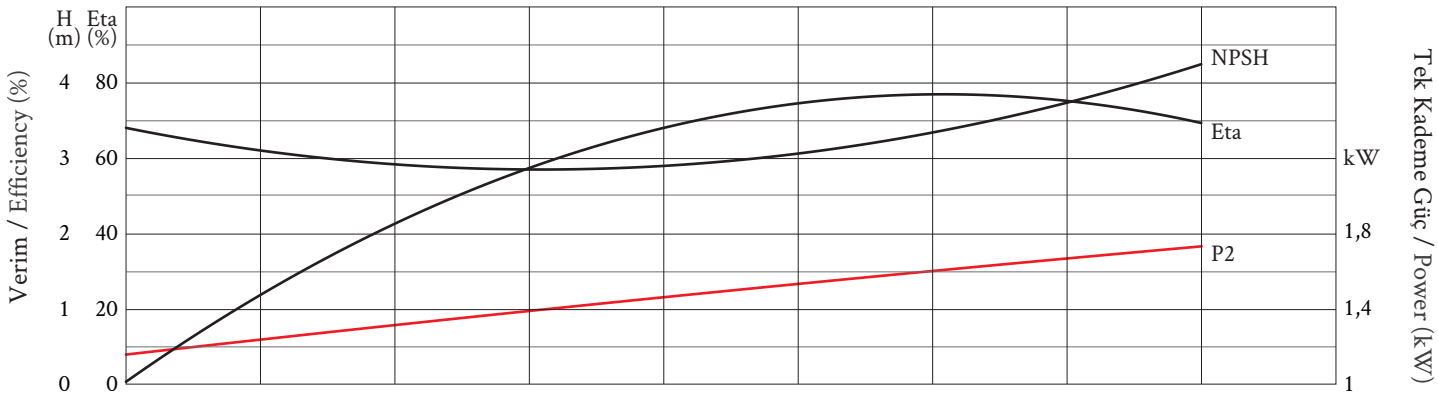

Pompa Tipi *Pump Type*	Motor			Kad. Sayısı *Stage No.*	Pompa Çıkışı *Pump Outlet*	Ø max *(mm)*	Basma Yüksekliği / *Head (m)*								
	Ø	HP	kW				0 *(l/s)*	8,0	10,0	12,0	14,0	16,0	18,0	20,0	21,0
							0 *(m³/h)*	28,8	36,0	43,2	50,4	57,6	64,8	72,0	75,6
S6CR60D 02/01-1	4”	2	1,5	1	3”-4”	145	12	10	8	7	6	5	4	3	2
S6CR60D 03/01	4”	3	2,2	1	3”-4”	145	14	12	10	9	8	7	6	5	4
S6CR60D 04/02-1	4”	4	3	2	3”-4”	145	26	21	19	17	15	13	12	9	6
S6CR60D 05/02	6”	5,5	4	2	3”-4”	145	28	23	21	19	17	15	14	11	8
S6CR60D 07/03	6”	7,5	5,5	3	3”-4”	145	42	35	30	28	27	24	21	16	12
S6CR60D 10/04	6”	10	7,5	4	3”-4”	145	55	46	40	38	36	33	28	21	16
S6CR60D 12/05	6”	12,5	9	5	3”-4”	145	70	58	51	47	45	41	35	26	20
S6CR60D 15/06	6”	15	11	6	3”-4”	145	84	70	61	57	54	49	43	31	24
S6CR60D 17/07	6”	17,5	13	7	3”-4”	145	95	82	72	68	60	57	50	37	28
S6CR60D 20/08	6”	20	15	8	3”-4”	145	116	96	88	77	72	65	57	42	32
S6CR60D 25/09	6”	25	18,5	9	3”-4”	145	130	108	99	87	81	73	64	47	36
S6CR60D 25/10	6”	25	18,5	10	3”-4”	145	145	120	110	97	90	82	70	53	40
S6CR60D 30/11	6”	30	22	11	3”-4”	145	159	134	122	106	99	90	77	58	44
S6CR60D 30/12	6”	30	22	12	3”-4”	145	174	145	133	115	108	98	84	63	48
S6CR60D 35/13	6”	35	26	13	3”-4”	145	188	158	144	126	117	105	90	68	52
S6CR60D 35/14	6”	35	26	14	3”-4”	145	196	170	154	132	121	110	93	72	56
S6CR60D 35/15	6”	35	26	15	3”-4”	145	210	183	165	142	130	118	100	78	60
S6CR60D 40/16	6”	40	30	16	3”-4”	145	224	195	176	152	138	126	107	83	64
S6CR60D 40/17	6”	40	30	17	3”-4”	145	238	207	186	161	146	134	113	88	68
S6CR60D 50/18	6”	50	37	18	3”-4”	145	252	219	197	170	155	142	120	93	72
S6CR60D 50/19	6”	50	37	19	3”-4”	145	266	230	208	180	165	150	127	98	76
S6CR60D 50/20	6”	50	37	20	3”-4”	145	280	244	220	190	173	158	133	104	81
S6CR60D 50/21	6”	50	37	21	3”-4”	145	295	252	231	199	183	166	141	109	86
S6CR60D 60/22	8”	60	45	22	3”-4”	193	310	264	242	209	191	174	147	114	90
S6CR60D 60/23	8”	60	45	23	3”-4”	193	325	276	253	218	200	182	154	120	94
S6CR60D 60/24	8”	60	45	24	3”-4”	193	336	288	265	228	208	189	160	124	98
S6CR60D 75/25	8”	75	55	25	3”-4”	193	350	300	275	237	217	197	167	130	102
S6CR60D 75/26	8”	75	55	26	3”-4”	193	365	312	286	247	226	205	174	135	107
S6CR60D 75/27	8”	75	55	27	3”-4”	193	380	325	297	256	235	213	181	140	111
S6CR60D 75/28	8”	75	55	28	3”-4”	193	395	336	308	266	244	221	188	146	115
S6CR60D 75/29	8”	75	55	29	3”-4”	193	406	348	319	275	252	229	194	151	119
S6CR60D 75/30	8”	75	55	30	3”-4”	193	420	360	330	285	261	237	201	156	123

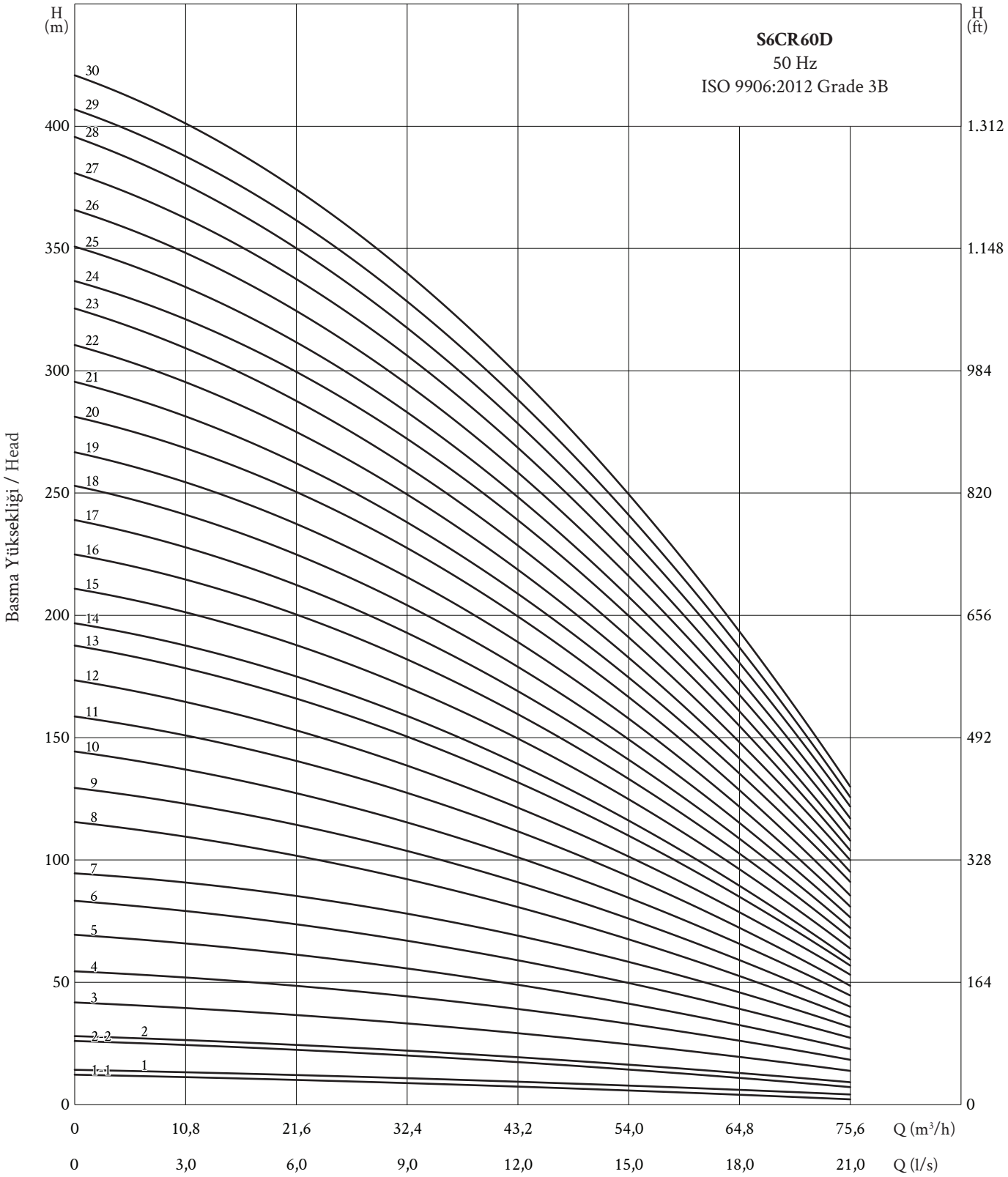

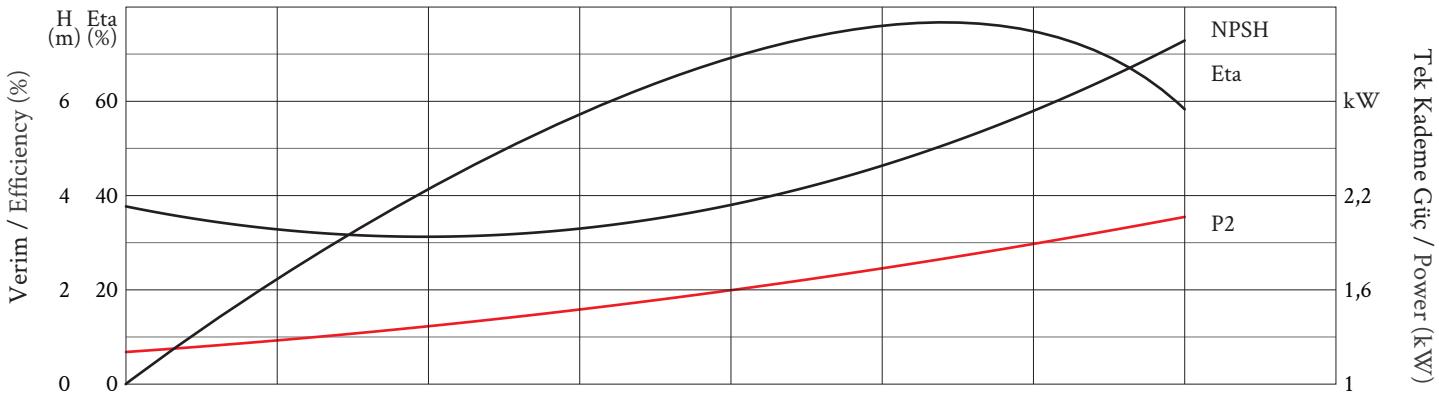

Pompa Tipi *Pump Type*	Motor			Kad. Sayısı *Stage No.*	Pompa Çıkışı *Pump Outlet*	Ø max *(mm)*	Basma Yüksekliği / *Head (m)*								
	Ø	HP	kW				0 *(l/s)*	7,0	14,0	20,0	22,0	25,0	28,0	31,0	33,0
							0 *(m³/h)*	25,2	50,4	72,0	79,2	90,0	100,8	111,6	118,8
S6CR90K 05/01	6”	5,5	4	1	4”	145	14	13	12	11	10	9	8	7	6
S6CR90K 07/02	6”	7,5	5,5	2	4”	145	28	26	24	22	20	18	16	14	11
S6CR90K 12/03	6”	12,5	9	3	4”	145	42	39	36	33	30	27	24	21	16
S6CR90K 17/04	6”	17,5	13	4	4”	145	56	52	48	44	40	36	32	28	21
S6CR90K 20/05	6”	20	15	5	4”	145	70	65	60	55	50	45	40	35	26
S6CR90K 25/06	6”	25	18,5	6	4”	145	84	78	72	66	60	54	48	42	31
S6CR90K 30/07	6”	30	22	7	4”	145	98	91	84	77	70	63	56	49	36
S6CR90K 35/08	6”	35	26	8	4”	145	112	104	96	88	80	72	64	56	41
S6CR90K 40/09	6”	40	30	9	4”	145	126	117	108	99	90	81	72	63	46
S6CR90K 40/10	6”	40	30	10	4”	145	140	130	120	110	100	90	80	70	51
S6CR90K 50/11	6”	50	37	11	4”	145	154	143	132	121	110	99	88	77	56
S6CR90K 50/12	6”	50	37	12	4”	145	168	156	144	132	120	108	96	84	61

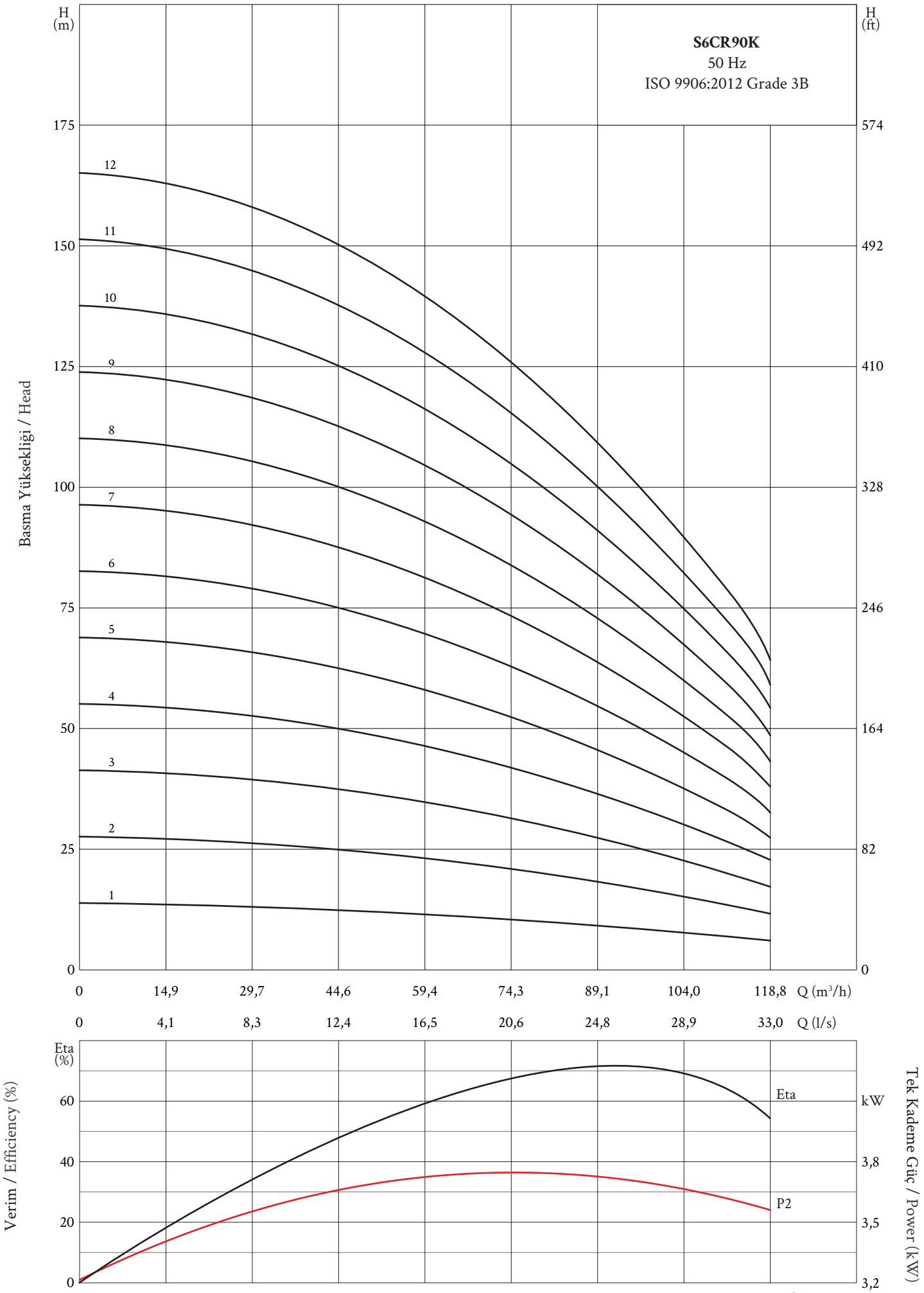

Pompa Tipi *Pump Type*	Motor			Kad. Sayısı *Stage No.*	Pompa Çıkışı *Pump Outlet*	Ø max *(mm)*	Basma Yüksekliği / *Head (m)*								
	Ø	HP	kW				0 *(l/s)*	16,0	18,0	20,0	21,0	22,0	24,0	26,0	28,0
							0 *(m³/h)*	57,6	64,8	72,0	75,6	79,2	86,4	93,6	100,8
S7CR77E 07/01	6”	7,5	5,5	1	5”	171	20	14	13	12	11	10	8	7	5
S7CR77E 10/02	6”	10	7,5	2	5”	171	40	28	26	24	22	21	17	14	10
S7CR77E 15/03	6”	15	11	3	5”	171	59	42	39	36	34	32	26	21	15
S7CR77E 17/04-1	6”	17	13	4	5”	171	75	53	49	46	43	41	33	26	20
S7CR77E 20/04	6”	20	15	4	5”	171	79	56	52	49	46	43	35	28	21
S7CR77E 25/05	6”	25	18,5	5	5”	171	99	70	66	62	58	54	45	36	27
S7CR77E 30/06	6”	30	22	6	5”	171	119	84	80	75	70	65	55	44	33
S7CR77E 35/07	6”	35	26	7	5”	171	139	98	94	88	82	76	65	52	38
S7CR77E 35/08-1	6”	35	26	8	5”	171	151	106	102	95	89	83	71	57	42
S7CR77E 40/08	6”	40	30	8	5”	171	159	112	108	101	94	87	75	60	44
S7CR77E 40/09	6”	40	30	9	5”	171	179	126	122	114	106	98	85	68	50
S7CR77E 50/10	7-8”	50	37	10	5”	171/193	199	140	136	127	118	109	95	76	56
S7CR77E 50/11	7-8”	50	37	11	5”	171/193	219	154	150	140	130	120	105	84	62
S7CR77E 60/12	7-8”	60	45	12	5”	171/193	239	168	164	153	142	131	115	92	68
S7CR77E 60/13-1	7-8”	60	45	13	5”	171/193	246	172	169	157	146	134	118	95	70
S7CR77E 70/14	7-8”	70	52	14	5”	171/193	265	186	182	170	157	145	128	102	76
S7CR77E 75/15	7-8”	75	55	15	5”	171/193	299	210	206	192	178	164	145	116	86
S7CR77E 80/16	8”	80	60	16	5”	193	319	224	220	205	190	175	155	124	92
S7CR77E 85/17	8”	85	63	17	5”	193	339	238	234	218	202	186	165	132	98
S7CR77E 85/18	8”	85	63	18	5”	193	359	252	248	231	214	197	175	140	104
S7CR77E 100/19	8”	100	75	19	5”	193	379	266	262	244	226	208	185	148	110
S7CR77E 100/20	8”	100	75	20	5”	193	399	280	276	257	238	219	195	156	116
S7CR77E 100/21	8”	100	75	21	5”	193	419	294	290	270	250	230	205	164	122
S7CR77E 125/22	8”	125	92	22	5”	193	439	308	304	283	262	241	215	172	128
S7CR77E 125/23	8”	125	92	23	5”	193	459	322	318	296	274	252	225	180	134
S7CR77E 125/24	8”	125	92	24	5”	193	479	336	332	309	286	263	235	188	140

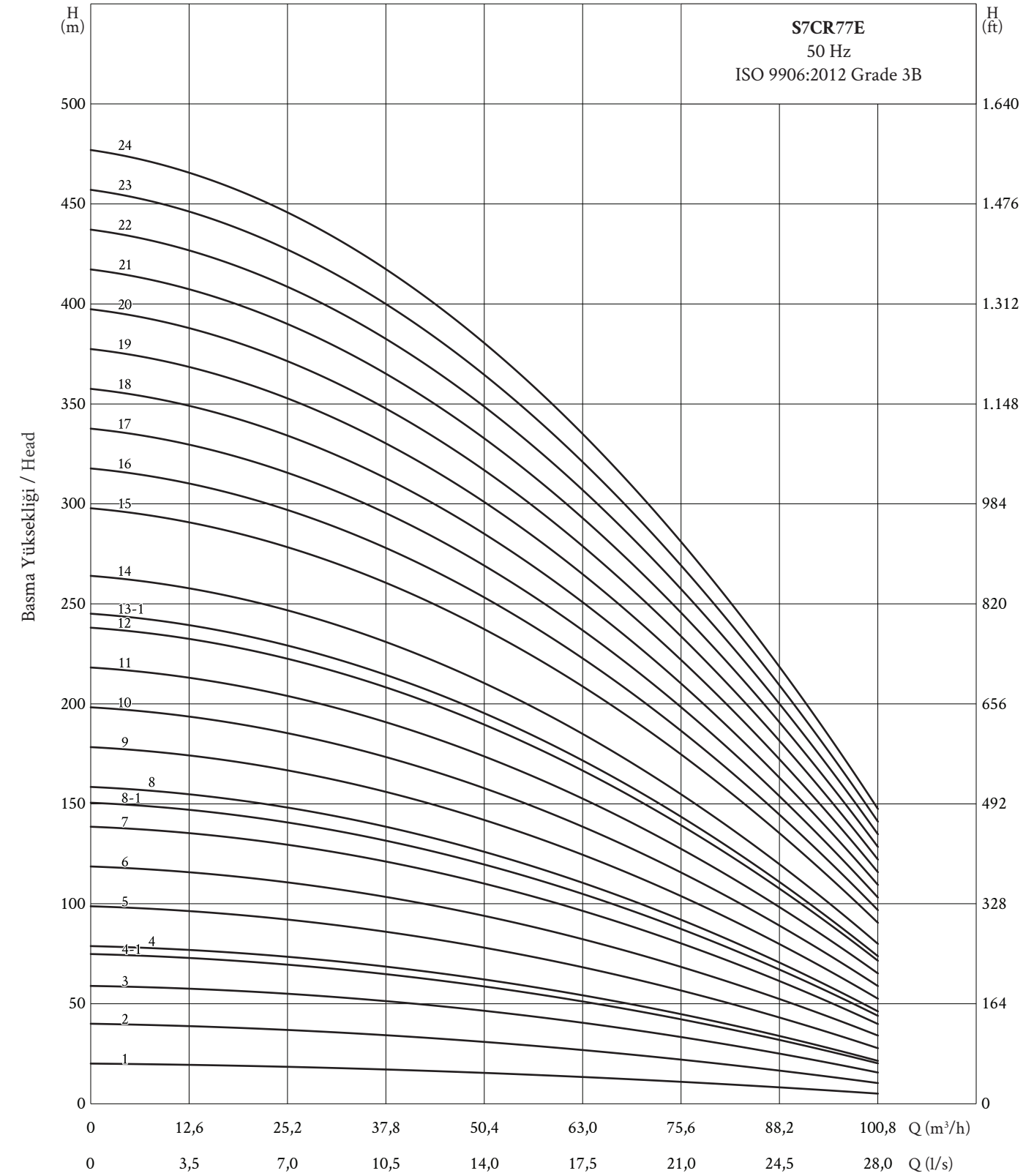

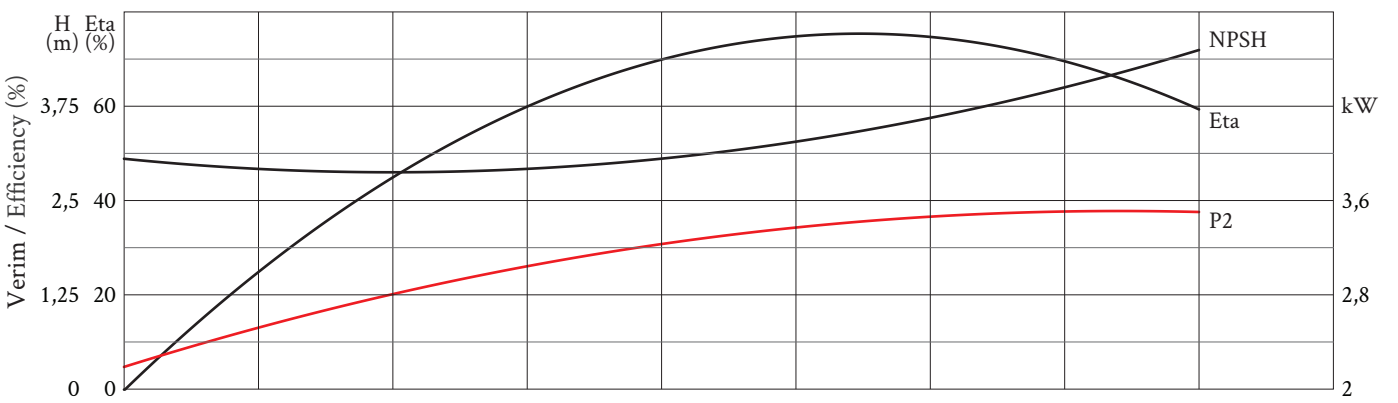

Pompa Tipi *Pump Type*	Motor			Kad. Sayısı *Stage No.*	Pompa Çıkışı *Pump Outlet*	Ø max *(mm)*	Basma Yüksekliği / *Head (m)*							
	Ø	HP	kW				0 *(l/s)*	11,0	16,0	19,0	22,0	25,0	27,0	30,0
							0 *(m³/h)*	39,6	57,6	68,4	79,2	90,0	97,2	108,0
S7CR95F 07/01	6”	7,5	5,5	1	5”	171	21	19	17	16	14	13	12	10
S7CR95F 12/02	6”	12,5	9	2	5”	171	42	37	34	32	29	26	24	20
S7CR95F 17/03	6”	17,5	13	3	5”	171	63	56	51	48	43	39	36	30
S7CR95F 25/04	6”	25	18,5	4	5”	171	84	75	68	64	58	52	48	40
S7CR95F 30/05	6”	30	22	5	5”	171	105	93	85	80	72	65	60	50
S7CR95F 35/06	6”	35	26	6	5”	171	126	112	102	96	87	78	72	60
S7CR95F 40/07	6”	40	30	7	5”	171	147	131	119	112	101	91	84	70
S7CR95F 50/08	7-8”	50	37	8	5”	171/193	168	150	136	128	116	104	96	80
S7CR95F 50/09	7-8”	50	37	9	5”	171/193	189	168	153	144	130	117	108	90
S7CR95F 60/10	7-8”	60	45	10	5”	171/193	210	187	170	160	145	130	120	100
S7CR95F 75/11	7-8”	75	55	11	5”	171/193	231	206	187	176	159	143	132	110
S7CR95F 75/12	7-8”	75	55	12	5”	171/193	252	224	204	192	174	156	144	120
S7CR95F 75/13	7-8”	75	55	13	5”	171/193	273	243	221	208	188	169	156	130
S7CR95F 85/14	8”	85	63	14	5”	193	294	262	238	224	203	182	168	140
S7CR95F 100/15	8”	100	75	15	5”	193	315	280	255	240	217	195	180	150
S7CR95F 100/16	8”	100	75	16	5”	193	336	299	272	256	232	208	192	160
S7CR95F 100/17	8”	100	75	17	5”	193	357	318	289	272	246	221	204	170
S7CR95F 125/18	8”	125	92	18	5”	193	378	337	306	288	261	234	216	180
S7CR95F 125/19	8”	125	92	19	5”	193	399	355	323	304	275	247	228	190
S7CR95F 125/20	8”	125	92	20	5”	193	420	374	340	320	290	260	240	200
S7CR95F 125/21	8”	125	92	21	5”	193	441	393	357	336	304	273	252	210
S7CR95F 125/22	8”	125	92	22	5”	193	462	411	374	352	319	286	264	220

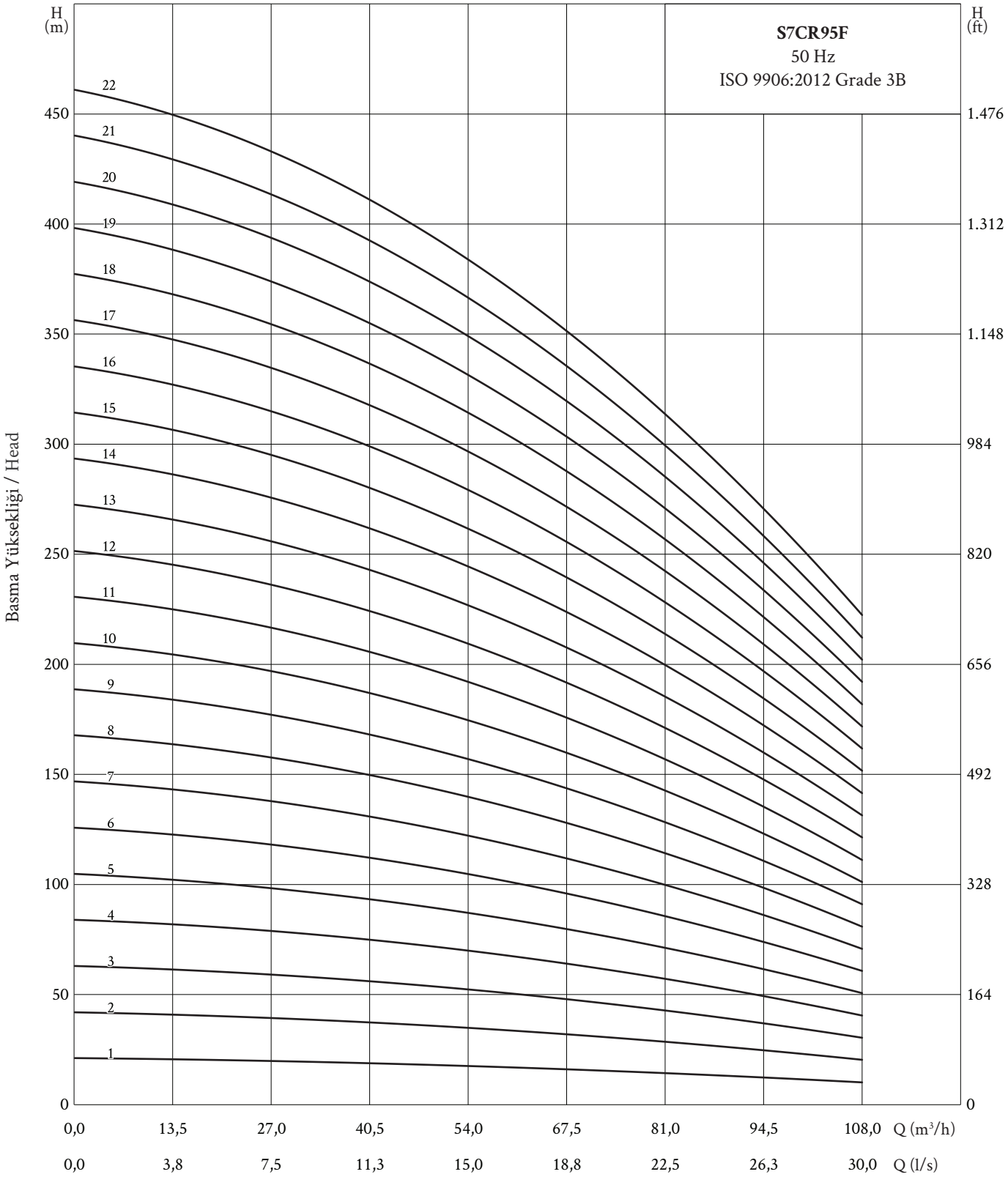

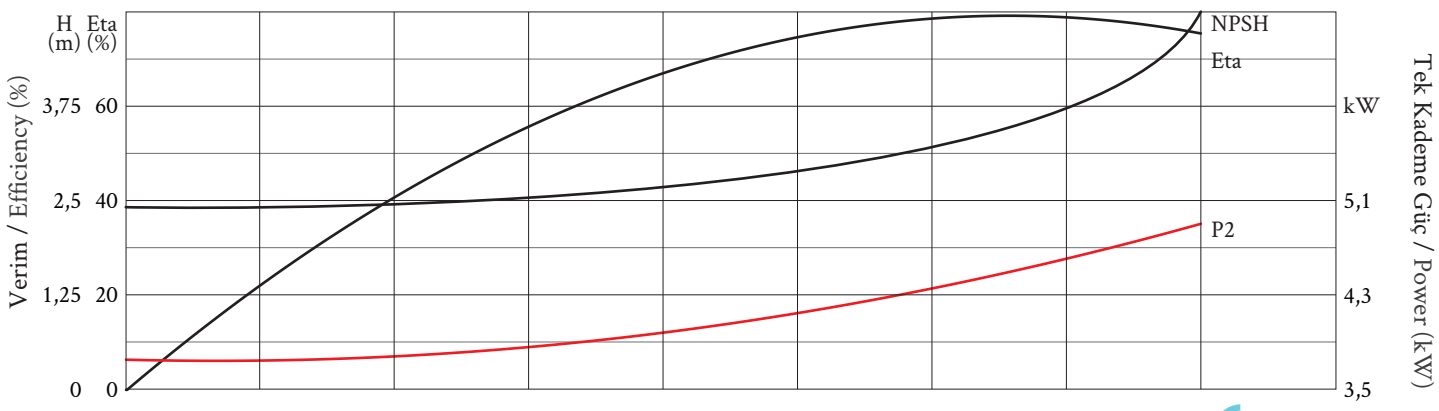

Pompa Tipi *Pump Type*	Motor			Kad. Sayısı *Stage No.*	Pompa Çıkışı *Pump Outlet*	Ø max *(mm)*	Basma Yüksekliği / *Head (m)*							
	Ø	HP	kW				0 *(l/s)*	5,6	11,1	19,4	25,0	27,8	30,6	35,0
							0 *(m³/h)*	20,0	40,0	70,0	90,0	100,0	110,0	126,0
S7CR105L 10/01	6”	10	7,5	1	5”	171	22	21	20	17	15	14	13	10
S7CR105L 15/02	6”	15	11	2	5”	171	44	43	39	33	30	28	26	20
S7CR105L 25/03	6”	25	18,5	3	5”	171	65	64	59	50	45	43	39	30
S7CR105L 30/04	6”	30	22	4	5”	171	87	86	78	67	61	57	52	40
S7CR105L 35/05	6”	35	26	5	5”	171	109	107	98	84	76	71	65	50
S7CR105L 50/06	7-8”	50	37	6	5”	171/193	131	129	117	100	91	85	78	61
S7CR105L 50/07	7-8”	50	37	7	5”	171/193	153	150	137	117	106	100	91	71
S7CR105L 60/08	7-8”	60	45	8	5”	171/193	175	171	157	134	121	114	104	81
S7CR105L 70/09	7-8”	70	52	9	5”	171/193	196	193	176	151	136	128	117	91
S7CR105L 75/10	7-8”	75	55	10	5”	171/193	218	214	196	167	152	142	130	101
S7CR105L 80/11	8”	80	60	11	5”	193	240	236	215	184	167	157	143	111
S7CR105L 90/12	8”	90	67	12	5”	193	262	257	235	201	182	171	156	121
S7CR105L 100/13	8”	100	75	13	5”	193	284	279	255	217	197	185	169	131
S7CR105L 100/14	8”	100	75	14	5”	193	305	300	274	234	212	199	182	141
S7CR105L 110/15	8”	110	81	15	5”	193	327	321	294	251	227	214	195	151
S7CR105L 125/16	8”	125	92	16	5”	193	349	343	313	268	242	228	208	161
S7CR105L 125/17	8”	125	92	17	5”	193	371	364	333	284	258	242	221	171
S7CR105L 150/18	10”	150	110	18	5”	240	393	386	352	301	273	256	234	182
S7CR105L 150/19	10”	150	110	19	5”	240	415	407	372	318	288	271	247	192
S7CR105L 150/20	10”	150	110	20	5”	240	436	429	392	334	303	285	260	202

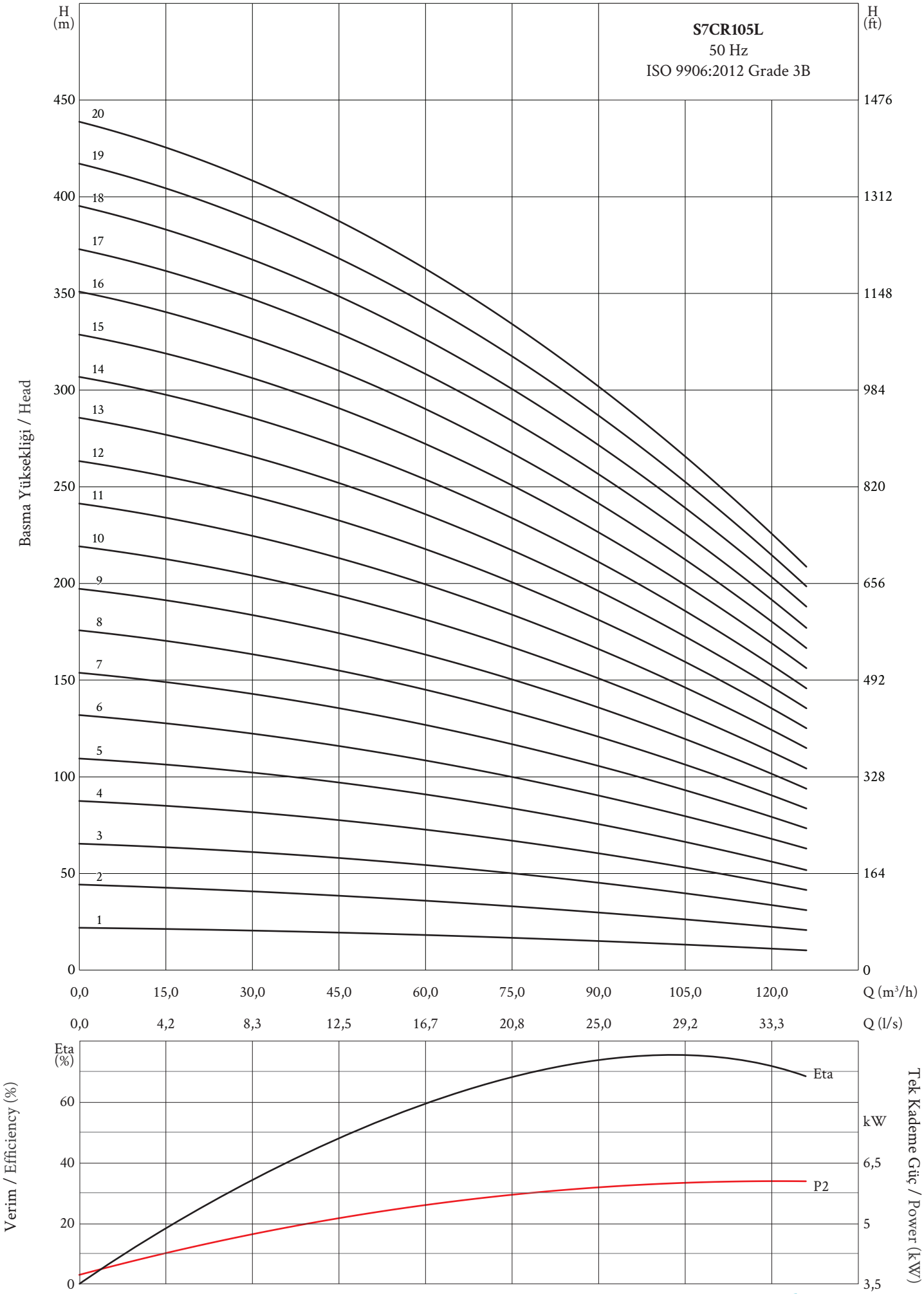

Pompa Tipi *Pump Type*	Motor			Kad. Sayısı *Stage No.*	Pompa Çıkışı *Pump Outlet*	Ø max *(mm)*	Basma Yüksekliği / *Head (m)*								
	Ø	HP	kW				0 *(l/s)*	25,0	30,0	33,0	36,0	39,0	42,0	45,0	47,0
							0 *(m³/h)*	90,0	108,0	118,8	129,6	140,4	151,2	162,0	169,2
S8CR135G 10/01-1	6”	10	7,5	1	6”	210	29	24	21	20	18	16	13	11	9
S8CR135G 15/01	6”	15	11	1	6”	210	31	26	23	22	20	18	15	13	11
S8CR135G 17/02-2	6”	17,5	13	2	6”	210	56	46	42	39	36	31	28	23	20
S8CR135G 25/02-1	6”	25	18,5	2	6”	210	59	49	44	42	38	33	29	24	21
S8CR135G 30/02	6”	30	22	2	6”	210	62	52	47	44	40	35	31	26	22
S8CR135G 30/03-2	6”	30	22	3	6”	210	83	70	63	59	54	47	41	35	29
S8CR135G 40/03-1	6”	40	30	3	6”	210	88	74	66	63	57	50	43	37	31
S8CR135G 50/03	8”	50	37	3	6”	210	93	78	70	66	60	53	46	39	33
S8CR135G 50/04-2	8”	50	37	4	6”	210	112	94	84	79	72	64	56	47	39
S8CR135G 60/04-1	8”	60	45	4	6”	210	118	99	89	83	76	67	59	49	42
S8CR135G 60/04	8”	60	45	4	6”	210	124	104	94	88	80	71	62	52	44
S8CR135G 60/05-2	8”	60	45	5	6”	210	140	117	105	99	90	79	69	58	49
S8CR135G 60/05-1	8”	60	45	5	6”	210	147	124	111	105	95	84	73	62	52
S8CR135G 75/05	8”	75	55	5	6”	210	155	130	117	110	100	88	77	65	55
S8CR135G 75/06-2	8”	75	55	6	6”	210	167	140	127	119	108	95	84	70	59
S8CR135G 75/06-1	8”	75	55	6	6”	210	177	148	134	125	114	101	88	74	63
S8CR135G 85/06	8”	85	63	6	6”	210	186	156	141	132	120	106	93	78	66
S8CR135G 90/07-1	8”	90	67	7	6”	210	206	173	156	146	133	118	103	86	73
S8CR135G 100/07	8”	100	75	7	6”	210	217	182	164	154	140	124	108	91	77
S8CR135G 100/08-2	8”	100	75	8	6”	210	223	187	169	158	144	127	111	94	79
S8CR135G 100/08-1	8”	100	75	8	6”	210	235	197	178	167	152	134	117	99	83
S8CR135G 110/08	8”	110	81	8	6”	210	248	208	188	176	160	142	124	104	88
S8CR135G 125/09-2	8”	125	92	9	6”	210	252	212	191	179	163	144	126	106	90
S8CR135G 125/09-1	8”	125	92	9	6”	210	265	222	200	188	171	151	132	111	94
S8CR135G 125/09	8”	125	92	9	6”	210	279	234	211	198	180	159	139	117	99
S8CR135G 150/10-1	10”	150	110	10	6”	240	294	247	223	209	190	168	147	124	104
S8CR135G 150/10	10”	150	110	10	6”	240	310	260	235	220	200	177	155	130	110
S8CR135G 150/11	10”	150	110	11	6”	240	341	286	258	242	220	195	170	143	121
S8CR135G 180/12	10”	180	130	12	6”	240	372	312	282	264	240	212	186	156	132
S8CR135G 180/13	10”	180	130	13	6”	240	403	338	305	286	260	230	201	169	143
S8CR135G 200/14	10”	200	150	14	6”	240	434	364	329	308	280	248	217	182	154
S8CR135G 200/15	10”	200	150	15	6”	240	465	390	352	330	300	265	232	195	165
S8CR135G 230/16	10”	230	170	16	6”	240	496	416	376	352	320	283	248	208	176
S8CR135G 230/17	10”	230	170	17	6”	240	527	442	399	374	340	301	263	221	187
S8CR135G 250/18	10”	250	185	18	6”	240	558	468	423	396	360	319	279	234	198

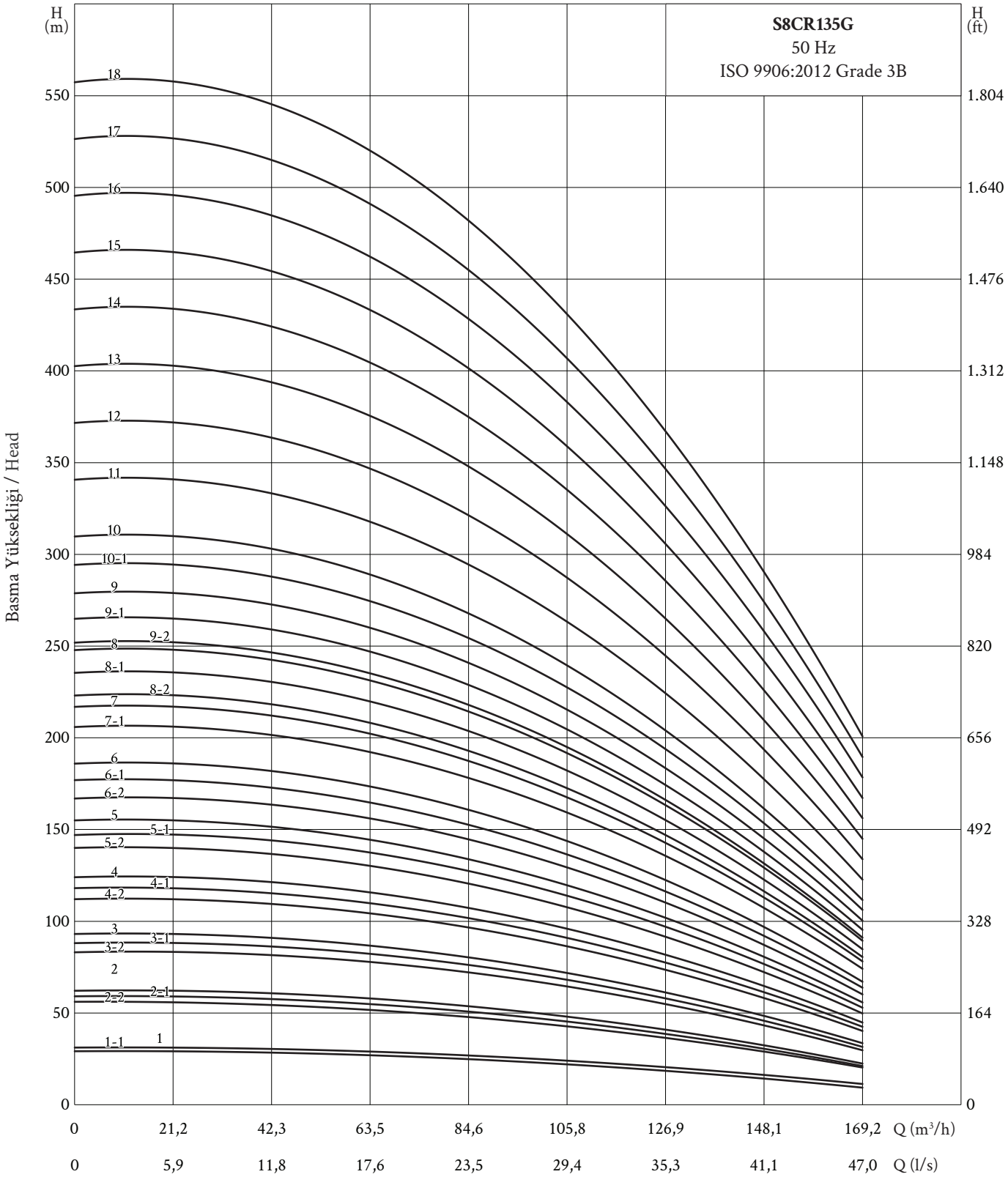

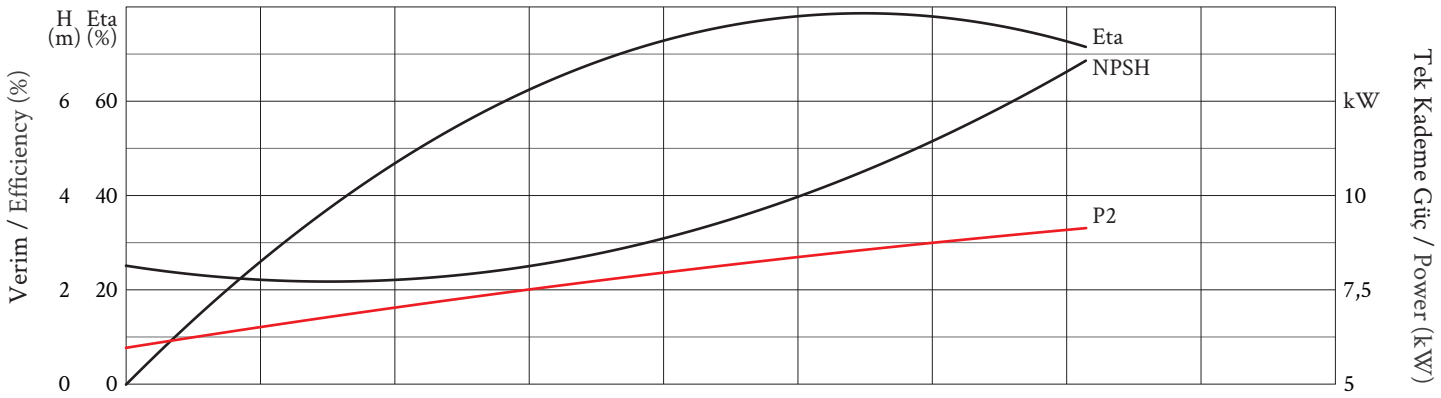

Pompa Tipi *Pump Type*	Motor			Kad. Sayısı *Stage No.*	Pompa Çıkışı *Pump Outlet*	Ø max *(mm)*	Basma Yüksekliği / *Head (m)*								
	Ø	HP	kW				0 *(l/s)*	20,0	25,0	30,0	35,0	40,0	45,0	50,0	55,0
							0 *(m³/h)*	72,0	90,0	108,0	126,0	144,0	162,0	180,0	198,0
S8CR160H 17/01	6”	17,5	13	1	6”	210	31	27	26	24	23	21	19	17	14
S8CR160H 25/02-2	6”	25	18,5	2	6”	210	57	49	47	44	41	38	34	31	26
S8CR160H 30/02-1	6”	30	22	2	6”	210	60	52	49	46	44	40	36	33	27
S8CR160H 35/02	6”	35	26	2	6”	210	63	55	52	49	46	42	38	35	29
S8CR160H 40/03-2	6”	40	30	3	6”	210	85	74	70	66	62	58	52	47	39
S8CR160H 50/03-1	8”	50	37	3	6”	210	89	78	74	69	66	61	55	49	41
S8CR160H 50/03	8”	50	37	3	6”	210	94	82	78	73	69	64	58	52	43
S8CR160H 60/04-2	8”	60	45	4	6”	210	113	98	94	88	83	76	70	62	52
S8CR160H 60/04-1	8”	60	45	4	6”	210	119	103	99	93	87	81	74	66	55
S8CR160H 75/04	8”	75	55	4	6”	210	126	109	104	98	92	85	78	69	58
S8CR160H 75/05-2	8”	75	55	5	6”	210	141	122	116	109	103	95	87	77	65
S8CR160H 75/05-1	8”	75	55	5	6”	210	149	129	122	115	108	101	92	81	68
S8CR160H 85/05	8”	85	63	5	6”	210	157	136	129	122	114	106	97	86	72
S8CR160H 85/06-2	8”	85	63	6	6”	210	170	147	139	131	123	114	105	94	78
S8CR160H 100/06-1	8”	100	75	6	6”	210	179	155	147	138	130	121	111	99	83
S8CR160H 100/06	8”	100	75	6	6”	210	189	164	155	146	137	127	117	104	87
S8CR160H 125/07-1	8”	125	92	7	6”	210	209	181	171	162	152	142	129	114	96
S8CR160H 125/07	8”	125	92	7	6”	210	220	191	181	171	160	149	136	121	101
S8CR160H 125/08	8”	125	92	8	6”	210	252	218	207	195	183	170	156	138	116
S8CR160H 150/09	10”	150	110	9	6”	240	283	246	233	220	206	191	175	156	130
S8CR160H 180/10	10”	180	130	10	6”	240	315	273	259	244	229	212	195	173	145
S8CR160H 180/11	10”	180	130	11	6”	240	346	300	285	268	252	233	214	190	159
S8CR160H 200/12	10”	200	150	12	6”	240	378	328	311	293	275	255	234	208	174
S8CR160H 250/13	10”	250	185	13	6”	240	409	355	337	317	298	276	253	225	188
S8CR160H 250/14	10”	250	185	14	6”	240	441	382	363	342	321	297	273	242	203
S8CR160H 250/15	10”	250	185	15	6”	240	472	409	389	366	343	318	292	259	217
S8CR160H 250/16	10”	250	185	16	6”	240	504	437	414	390	366	340	312	277	232

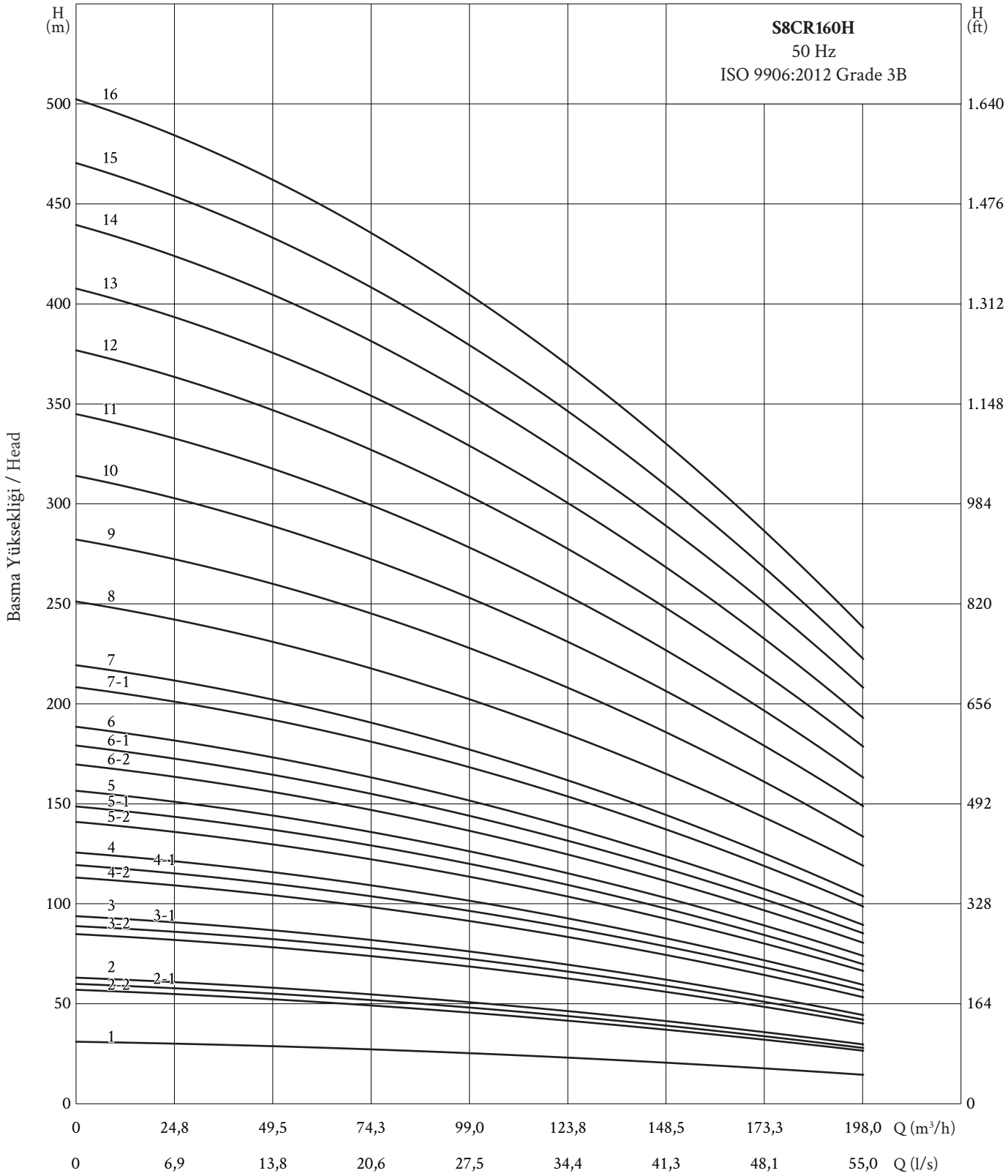

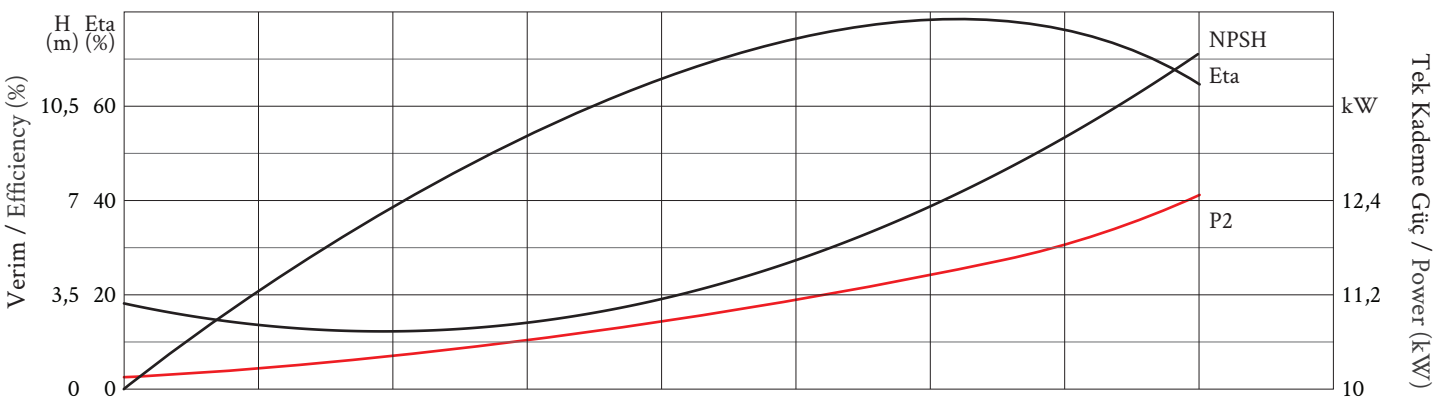

Pompa Tipi *Pump Type*	Motor			Kad. Sayısı *Stage No.*	Pompa Çıkışı *Pump Outlet*	Ø max *(mm)*	Basma Yüksekliği / *Head (m)*								
	Ø	HP	kW				0 *(l/s)*	28,0	35,0	42,0	50,0	56,0	62,0	70,0	78,0
							0 *(m³/h)*	100,8	126,0	151,2	180,0	201,6	223,2	252,0	280,8
S10CR200I 20/01-1	6”	20	15	1	6”	232	33	30	27	25	23	21	17	12	7
S10CR200I 25/01	6”	25	18,5	1	6”	232	35	32	29	27	25	22	18	13	8
S10CR200I 40/02-2	6”	40	30	2	6”	232	63	57	52	48	45	39	32	23	14
S10CR200I 50/02-1	8”	50	37	2	6”	232	66	61	55	51	47	42	34	25	15
S10CR200I 60/02	8”	60	45	2	6”	232	70	64	58	54	50	44	36	26	16
S10CR200I 60/03-3	8”	60	45	3	6”	232	89	81	74	69	64	56	47	33	20
S10CR200I 70/03-2	8”	70	52	3	6”	232	94	86	78	73	67	59	50	35	21
S10CR200I 75/03-1	8”	75	55	3	6”	232	100	91	82	77	71	63	53	37	23
S10CR200I 85/03	8”	85	63	3	6”	232	105	96	87	81	75	66	56	39	24
S10CR200I 90/04-3	8”	90	67	4	6”	232	119	109	98	92	85	75	64	44	27
S10CR200I 90/04-2	8”	90	67	4	6”	232	126	115	104	97	90	79	68	47	29
S10CR200I 100/04-1	8”	100	75	4	6”	232	133	121	110	102	95	83	72	49	30
S10CR200I 100/04	8”	100	75	4	6”	232	140	128	116	108	100	88	76	52	32
S10CR200I 110/05-3	8”	110	81	5	6”	232	149	134	124	115	106	93	82	55	34
S10CR200I 125/05-2	8”	125	92	5	6”	232	157	142	131	121	112	99	86	58	36
S10CR200I 125/05	8”	125	92	5	6”	232	175	158	146	135	125	110	96	65	40
S10CR200I 150/06-3	10”	150	110	6	6”	240	178	160	149	137	127	112	99	66	41
S10CR200I 150/06-2	10”	150	110	6	6”	240	189	169	158	146	135	119	104	70	43
S10CR200I 150/06-1	10”	150	110	6	6”	240	199	178	167	154	142	125	110	74	45
S10CR200I 150/06	10”	150	110	6	6”	240	210	188	176	162	150	132	116	78	48
S10CR200I 180/07-3	10”	180	130	7	6”	240	208	185	175	161	149	133	117	79	49
S10CR200I 180/07-2	10”	180	130	7	6”	240	220	196	185	170	157	139	122	82	50
S10CR200I 180/07-1	10”	180	130	7	6”	240	233	207	196	179	166	146	129	86	53
S10CR200I 180/07	10”	180	130	7	6”	240	245	218	206	189	175	154	136	91	56
S10CR200I 180/08-2	10”	180	130	8	6”	240	252	223	212	194	180	158	140	94	58
S10CR200I 180/08-1	10”	180	130	8	6”	240	266	235	224	205	190	167	148	99	61
S10CR200I 180/08	10”	180	130	8	6”	240	280	248	236	216	200	176	156	104	64
S10CR200I 200/09-2	10”	200	150	9	6”	240	283	250	240	219	202	178	158	105	65
S10CR200I 200/09-1	10”	200	150	9	6”	240	299	264	253	231	214	188	167	111	68
S10CR200I 200/09	10”	200	150	9	6”	240	315	278	266	243	225	198	176	117	72
S10CR200I 250/10-2	10”	250	185	10	6”	240	317	280	168	245	227	200	178	119	74
S10CR200I 250/10-1	10”	250	185	10	6”	240	332	292	281	256	237	209	186	123	76
S10CR200I 250/10	10”	250	185	10	6”	240	350	308	296	270	250	220	196	130	80

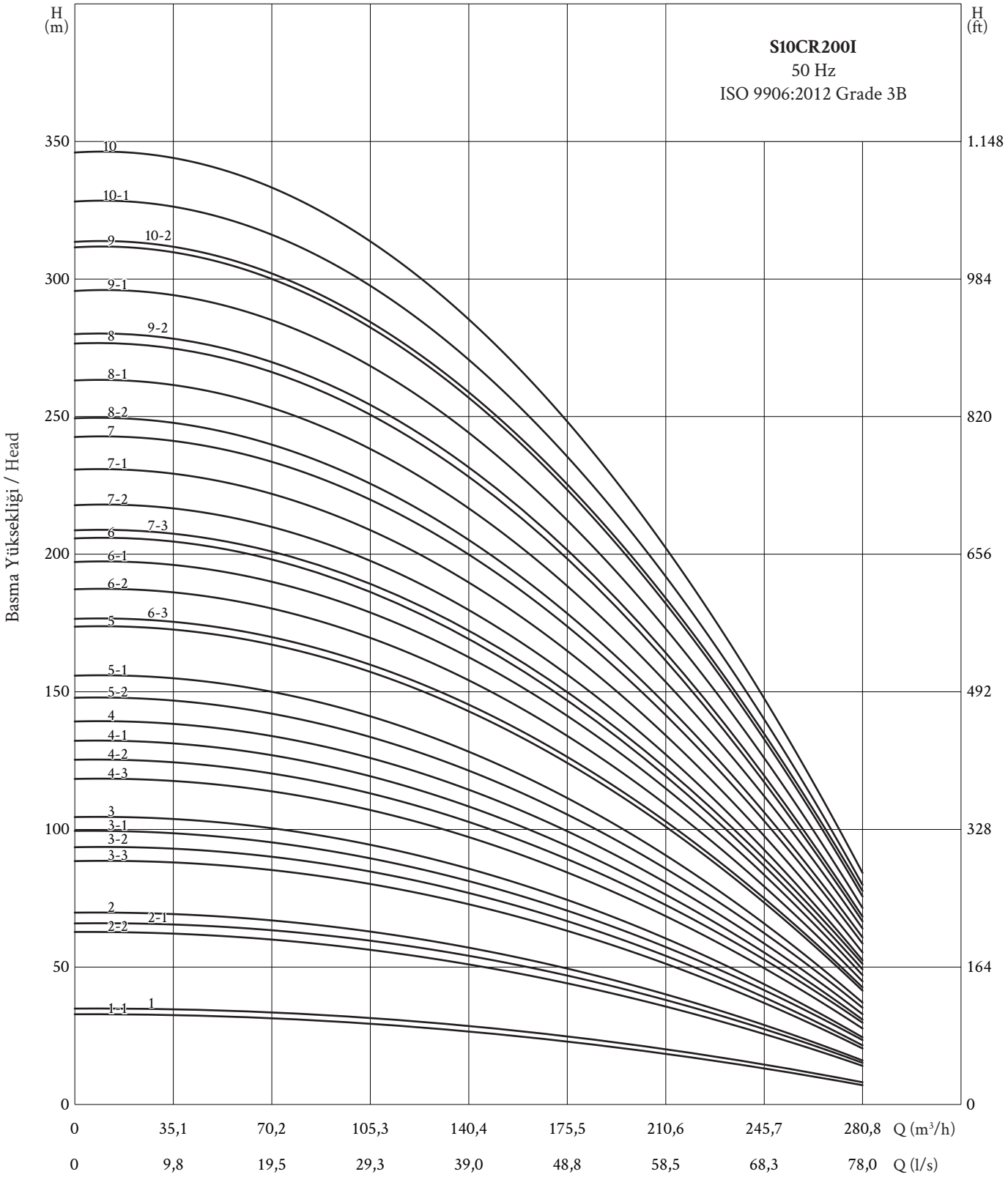

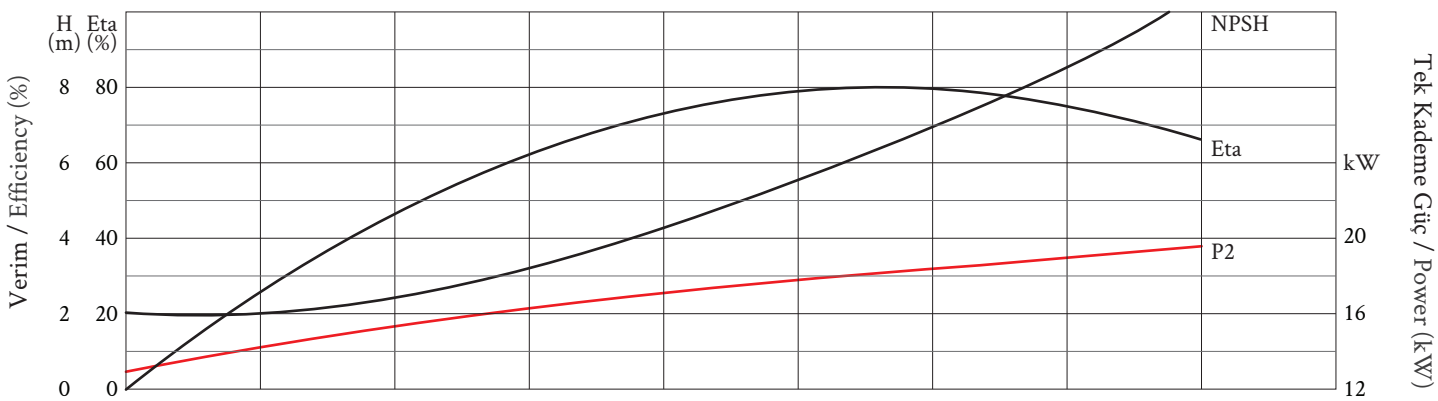

Pompa Tipi *Pump Type*	Motor			Kad. Sayısı *Stage No.*	Pompa Çıkışı *Pump Outlet*	Ø max *(mm)*	Basma Yüksekliği / *Head (m)*								
	Ø	HP	kW				0 *(l/s)*	13,9	27,8	41,7	55,6	62,5	69,4	83,3	88,9
							0 *(m³/h)*	50,0	100,0	150,0	200,0	225,0	250,0	300,0	320,0
S10CR250I 25/01	6”	25	18,5	1	6”	232	36	35	33	30	26	24	21	14	9
S10CR250I 60/02	8”	60	45	2	6”	232	73	70	66	59	51	47	43	28	18
S10CR250I 85/03	8”	85	63	3	6”	232	109	105	97	88	76	71	64	42	27
S10CR250I 125/04	8”	125	92	4	6”	232	146	140	131	117	102	95	86	56	36
S10CR250I 150/05	10”	150	110	5	6”	240	182	175	162	146	127	118	107	70	45
S10CR250I 180/06	10”	180	130	6	6”	240	219	212	196	175	156	144	129	84	54
S10CR250I 200/07	10”	200	150	7	6”	240	255	247	227	204	182	168	150	98	63
S10CR250I 250/08	10”	250	185	8	6”	240	292	283	262	233	208	192	175	112	72

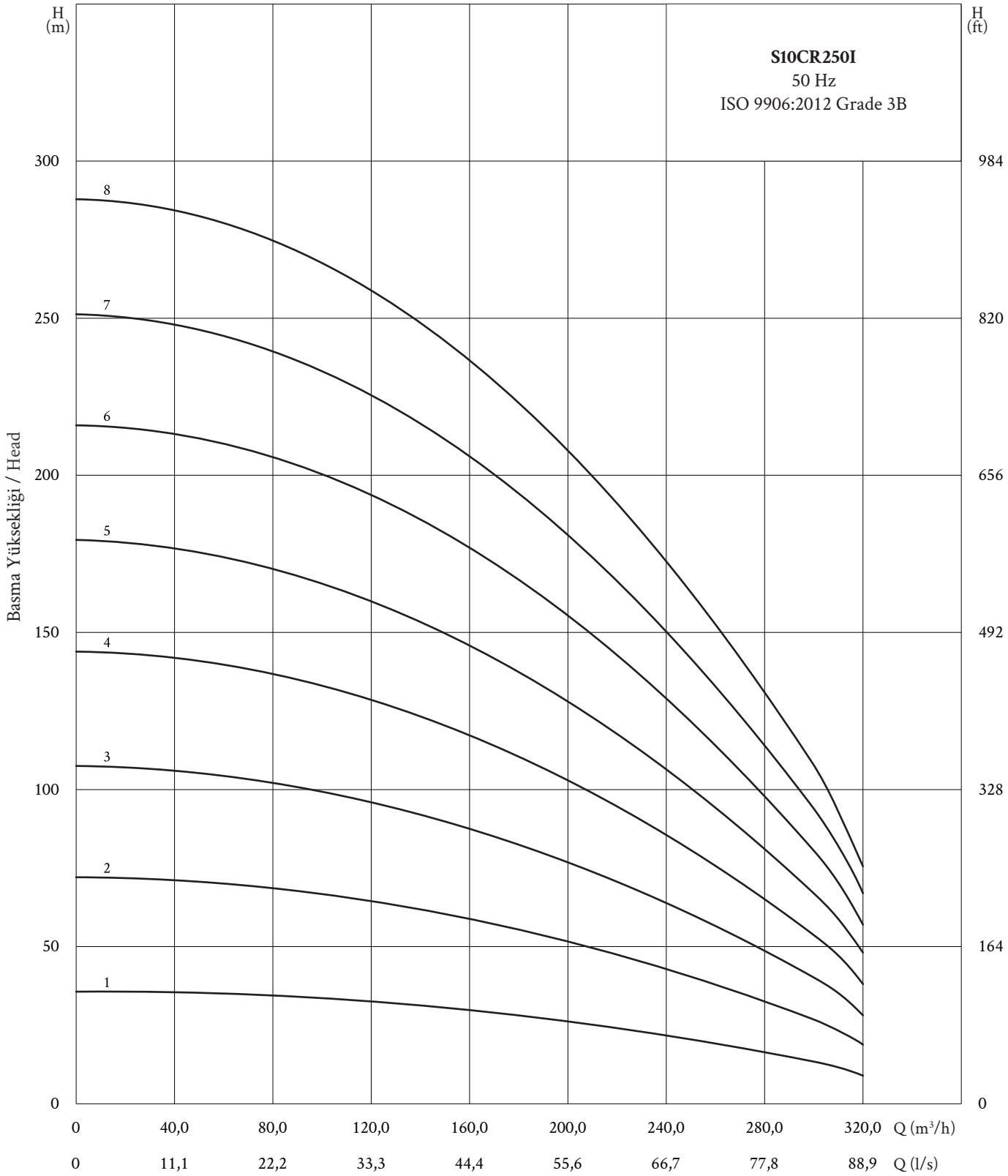

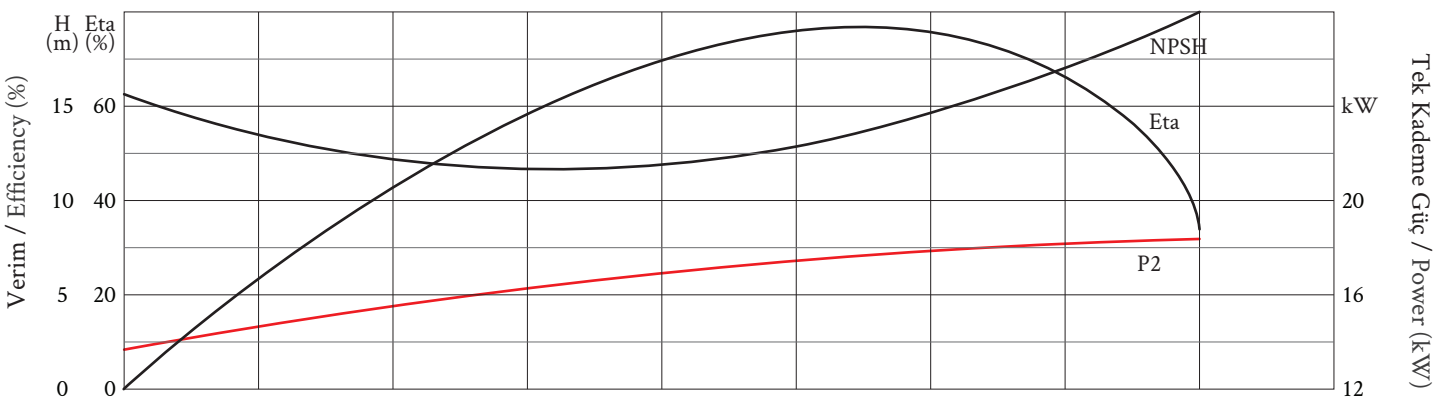

ÜSTÜNEL
Dalgıç Pompa-Submersible Pump

YAĞ SOĞUTMALI DALGIÇ MOTORLAR

OIL FILLED SUBMERSIBLE MOTORS

Teknik Özellikler

Yağ Soğutmalı
Sarılabilir Tip Motor
NEMA Standardına Uygun Flanş
Dikey ve Yatay Çalışabilme
Çift Yönlü Çalışabilme (saat yönünde ve tersi yönde)
Soft Starter ile Çalışmaya Uygun
Frekans Konvertörü ile 30 Hz üzerinde değişken hızlarda çalışabilme

Technical Specifications

Oil Cooled
Rewindable Motor
NEMA Standard Flange
Vertical and Horizontal Operation
Bidirectional Operation (CW & CCW direction of rotation)
Soft Starter Operation Possibility
Variable speed operation possibility by variable frequency drive (VFD) (over 30 Hz)

Çalışma Koşulları

Maksimum Su Sıcaklığı		35°C
Motor Koruma Sınıfı		IP68
Frekans		50 Hz 2900 d/dk, 60 Hz 3450 d/dk
Voltaj		220-230-380-400-415 V/50 Hz 220-380 V/60 Hz
Voltaj Toleransı		
	220 V	± %3
	380 V	± %5

Operating Conditions

Max. Water Temperature		*35°C*
Motor Protection Class		*IP68*
Frequency		*50 Hz 2900 rpm,* *60 Hz 3450 rpm*
Voltage		*220-230-380-400-415 V/50 Hz* *220-380 V/60 Hz*
Voltage Tolerance		
	220 V	*± 3%*
	380 V	*± 5%*

Motor Çeşitleri / *Motor Range*

Motor Ölçüsü	Motor Dimensions	4“	6“
Motor Gücü (kW)	*Motor Power (kW)*	0,75-7,5	5,5-22
Maks. Kalkış sayısı (kalkış/sa)	*Max. Start Number (start/h)*	20	20
Eksenel Yük Taşıma Kapasitesi (kN)	*Axial Thrust Load Capacity (kN)*	1,5 (0,75kW) 2,5 (1,1-2,2kW) 5 (3-7,5kW)	10
Dikey Kurulum (kW)	*Vertical Installation (kW)*	0,75-7,5	5,5-22
Yatay Kurulum (kW)	*Horizontal Installation (kW)*	0,75-7,5	5,5-22

Opsiyonel

Korozyona dayanıklı malzeme seçeneği	AISI 316, Bronz
PT100 Isı Sensörü	

Optional

Optional high corrosion resistance materials	*AISI 316, Bronze*
PT100 Temperature Sensor	

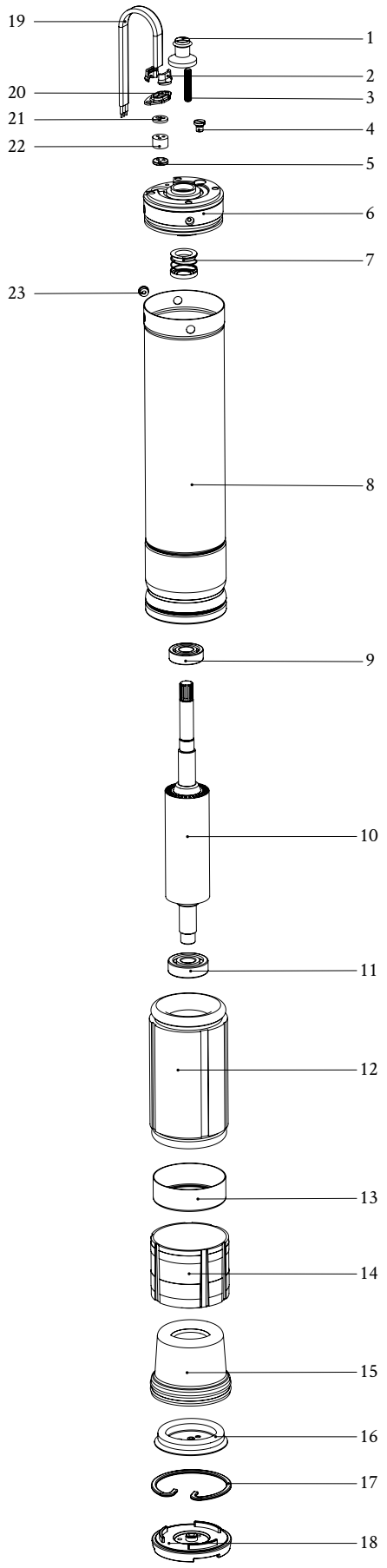

No	Ürün	Malzeme
1	Kum Tutucu	Kauçuk (NBR)
2	Kablo Tutucu	Bakalit
3	Motor Saplaması	Paslanmaz Çelik (AISI 304)
4	Yağ Tapası	Bronze
5	Kablo Tutucu Destek	Bronze
6	Üst Kapak	Döküm (EN-GJL-250)
7	Mekanik Keçe	Seramik Karbon
8	Dış Kılıf Borusu	Paslanmaz Çelik (AISI 304)
9	Rotor	Silisli Sac
10	Statör	Silisli Sac
11	Bobin Koruyucu	ABS
12	Alt Kapak	Alüminyum
13	Membran	Kauçuk
14	Membran Sacı	Paslanmaz Çelik (AISI 304)
15	Membran Sacı Segmanı	Paslanmaz Çelik (AISI 304)
16	Alt Koruyucu	ABS
17	Çıkış Kablosu	PVC
18	Kablo Tutucu Sac	Paslanmaz Çelik (AISI 304)
19	Kablo Tutucu (delikli)	ABS
20	Kablo Tutucu Kauçuk	Kauçuk (NBR)
21	Gövde Borusu Pimi	Paslanmaz Çelik (AISI 304)

No	Component	Material
1	Sand Guard	Rubber (NBR)
2	Cable Holder Bakalite	Bakalite
3	Motor Stud	Stainless Steel (AISI 304)
4	Oil Plug	Bronze
5	Cable Holder Support	Bronze
6	Upper Cover	Cast Iron (EN-GJL-250)
7	Mechanical Seal	Seramic Carbon
8	Outer Sleeve	Stainless Steel (AISI 304)
9	Rotor	Electrical Steel
10	Stator	Electrical Steel
11	Coil Cover	ABS
12	Below Cover	Aluminium
13	Membrane	Rubber
14	Membrane Sheet	Stainless Steel (AISI 304)
15	Membrane Sheet Ring	Stainless Steel (AISI 304)
16	Bottom Guard	ABS
17	Outlet Cable	PVC
18	Cable Holder Sheet	Stainless Steel (AISI 304)
19	Cable Holder (perforated)	ABS
20	Cable Holder Rubber	Rubber (NBR)
21	Outer Sleeve Pin	Stainless Steel (AISI 304)

4“ Motor

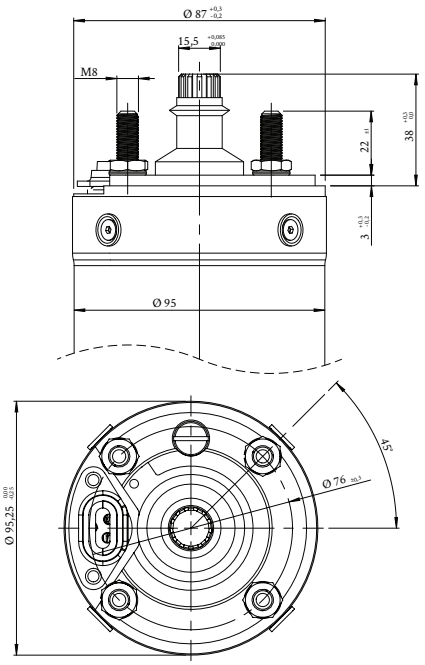

6“ Motor

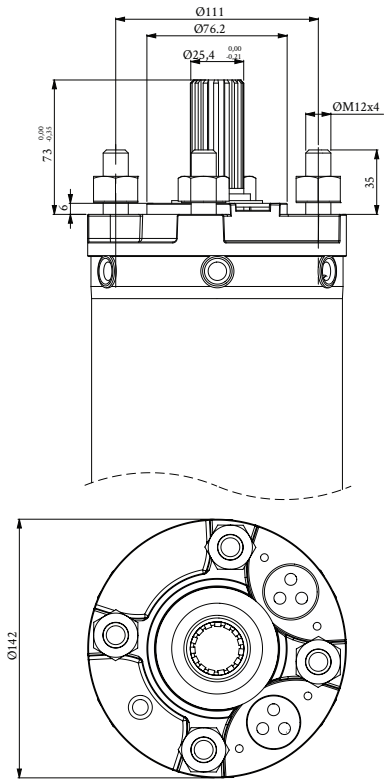

Motor Tipi *Motor Type*	Ölçü *Size*	Power		Direkt *(D.O.L.)*		Yıldız Üçgen *Star Delta*		Eksenel Yük *Ax. Load*	Yol Verme *Start*	Boy *Lenght*	Ağırlık *Weight*
		HP	kW	mm²	n	mm²	n	kN	Start /h	mm	*kg*
S095MC/01-M	4”	1	0,75	3x2	1	-	-	1,5	20	441	10
S095MC/1,5-M	4”	1,5	1,1	3x2	1	-	-	2,5	20	467	11
S095MC/02-M	4”	2	1,5	3x2	1	-	-	2,5	20	495	13
S095MC/03-M	4”	3	2,2	3x2	1	-	-	2,5	20	598	17
S095MC/04-M	4”	4	3	3x2	1	-	-		20	625	18
S095MC/05-M	4”	5,5	4	3x2	1	-	-		20	723	25
S095MC/01-T	4”	1	0,75	3x2	1	-	-	2,5	20	405	9
S095MC/1,5-T	4”	1,5	1,1	3x2	1	-	-	2,5	20	441	10
S095MC/02-T	4”	2	1,5	3x2	1	-	-	2,5	20	459	11
S095MC/03-T	4”	3	2,2	3x2	1	-	-	2,5	20	495	12
S095MC/04-T	4”	4	3	3x2	1	-	-	5	20	555	16
S095MC/5,5-T	4”	5,5	4	3x2	1	-	-	5	20	625	20
S095MC/7,5-T	4”	7,5	5,5	3x2	1	-	-	5	20	723	23
S095MC/10-T	4”	10	7,5	3x2	1	-	-	5	20	760	26
S145MO/5,5	6”	5,5	4	4x4	1	-	-		20	625	46
S145MO/7,5	6”	7,5	5,5	4x4	1	-	-	10	20	625	46
S145MO/10	6”	10	7,5	4x4	1	-	-	10	20	660	50
S145MO/12,5	6”	12,5	9	4x4	1	-	-	10	20	705	55
S145MO/15	6”	15	11	4x4	1	-	-	10	20	750	61
S145MO/17,5	6”	17,5	13	4x4	1	-	-	10	20	800	66
S145MO/20	6”	20	15	4x4	1	-	-	10	20	850	72
S145MO/25	6”	25	18,5	4x4	1	-	-	10	20	930	81
S145MO/30	6”	30	22	4x4	1	-	-	10	20	1010	90

220 / 230 / 380 / 400 / 415 V

4" 50 HZ

Power		In [A]	rpm [min-1]	Verim η (eff.)			Cos φ (PF)			Eksenel Yük *Ax. Load*	Maximum	
HP	kW			%50	%75	%100	%50	%75	%100		Yol Verme *Start*	Su Sıcak. *Water Temp.*
220 V												
1	0,75	5,8	2800	41	51	58	0,96	0,98	0,98	1500	20	35°C
1,5	1,1	8,2	2810	49	59	65	0,88	0,90	0,95	2500	20	35°C
2	1,5	10,4	2815	51	61	66	0,91	0,96	0,97	2500	20	35°C
3	2,2	14,8	2820	52	61	66	0,94	0,97	0,99	2500	20	35°C
230 V												
1	0,75	5,9	2820	40	50	57	0,93	0,96	0,97	1500	20	35°C
1,5	1,1	8,6	2825	47	58	63	0,77	0,86	0,90	2500	20	35°C
2	1,5	10,6	2820	47	58	65	0,81	0,90	0,93	2500	20	35°C
3	2,2	14,6	2830	50	60	66	0,87	0,93	0,97	2500	20	35°C
380 V												
1	0,75	2,2	2810	52	58	60	0,69	0,79	0,82	1500	20	35°C
1,5	1,1	3	2800	62	67	69	0,66	0,70	0,83	2500	20	35°C
2	1,5	4	2800	63	68	71	0,62	0,75	0,82	2500	20	35°C
3	2,2	5,7	2800	69	72	73	0,60	0,74	0,82	2500	20	35°C
4	3	7,5	2800	72	75	76	0,60	0,74	0,83	5000	20	35°C
5,5	4	9,7	2830	75	77	78	0,61	0,74	0,82	5000	20	35°C
7,5	5,5	12,6	2840	77	78	79	0,64	0,77	0,86	5000	20	35°C
10	7,5	17,5	2840	75	78	79	0,65	0,78	0,85	5000	20	35°C
400 V												
1	0,75	2,2	2835	53	59	61	0,62	0,74	0,78	1500	20	35°C
1,5	1,1	3	2830	62	67	70	0,58	0,70	0,79	2500	20	35°C
2	1,5	4,1	2820	64	70	71	0,52	0,68	0,76	2500	20	35°C
3	2,2	5,8	2820	67	72	73	0,52	0,66	0,76	2500	20	35°C
4	3	7,6	2810	71	75	76	0,51	0,66	0,78	5000	20	35°C
5,5	4	9,8	2830	75	77	78	0,52	0,67	0,77	5000	20	35°C
7,5	5,5	12,5	2845	76	78	79	0,56	0,70	0,82	5000	20	35°C
10	7,5	16,9	2850	73	75	78	0,62	0,77	0,81	5000	20	35°C
415 V												
1	0,75	2,25	2850	51	59	61	0,58	0,70	0,74	1500	20	35°C
1,5	1,1	3	2840	61	67	69	0,53	0,66	0,75	2500	20	35°C
2	1,5	4,3	2840	61	68	70	0,48	0,62	0,71	2500	20	35°C
3	2,2	6	2835	65	70	72	0,46	0,60	0,71	2500	20	35°C
4	3	7,9	2820	69	74	75	0,45	0,60	0,72	5000	20	35°C
5,5	4	10,3	2835	73	76	78	0,47	0,62	0,71	5000	20	35°C
7,5	5,5	12,8	2850	72	77	78	0,50	0,64	0,78	5000	20	35°C
10	7,5	17,3	2850	70	72	76	0,60	0,75	0,79	5000	20	35°C

4” 60 HZ

1*220 / 3*220 / 3* 380 V

Power		In [A]	rpm [min-1]	Verim η (eff.)			Cos φ (PF)			Eksenel Yük *Ax. Load*	Maximum	
HP	kW			%50	%75	%100	%50	%75	%100		Yol Verme *Start*	Su Sıcak. *Water Temp.*
1*220 V												
1	0,75	6,5	3475	40	48	55	0,91	0,96	0,97	1500	20	35°C
1,5	1,1	8,8	3440	43	54	60	0,93	0,95	0,96	2500	20	35°C
2	1,5	11,4	3445	49	58	64	0,91	0,95	0,97	2500	20	35°C
3	2,2	16,5	3450	48	59	64	0,95	0,96	0,97	2500	20	35°C
3*220 V												
1	0,75	4,5	3490	47	53	61	0,63	0,71	0,78	1500	20	35°C
1,5	1,1	5,8	3450	57	65	68	0,66	0,75	0,81	2500	20	35°C
2	1,5	7,3	3460	65	71	72	0,60	0,71	0,80	2500	20	35°C
3	2,2	10,5	3440	64	67	73	0,60	0,71	0,81	2500	20	35°C
4	3	13,8	3420	69	72	75	0,62	0,74	0,81	2500	20	35°C
5,5	4	17,5	3465	70	75	77	0,61	0,73	0,82	5000	20	35°C
7,5	5,5	23,2	3460	73	78	79	0,64	0,77	0,83	5000	20	35°C
10	7,5	30,8	3455	75	78	80	0,64	0,76	0,82	5000	20	35°C
3*380 V												
1	0,75	2,6	3500	50	57	62	0,56	0,63	0,73	1500	20	35°C
1,5	1,1	3,2	3465	65	67	71	0,56	0,68	0,75	2500	20	35°C
2	1,5	4,5	3460	62	65	72	0,54	0,67	0,75	2500	20	35°C
3	2,2	6,4	3460	66	72	74	0,53	0,63	0,73	2500	20	35°C
4	3	8,5	3470	70	74	77	0,52	0,61	0,72	2500	20	35°C
5,5	4	10,4	3480	74	78	81	0,53	0,66	0,76	5000	20	35°C
7,5	5,5	13,7	3490	74	79	81	0,56	0,70	0,77	5000	20	35°C
10	7,5	18,5	3460	72	77	82	0,58	0,75	0,83	5000	20	35°C

380 / 400 / 415 V — 6” 50 HZ

Power		In [A]	rpm [min-1]	Verim η (eff.)			Cos φ (PF)			Eksenel Yük *Ax. Load*	Maximum	
HP	kW			%50	%75	%100	%50	%75	%100		Yol Verme *Start*	Su Sıcak. *Water Temp.*
380 V												
7,5	5,5	13	2830	60	71	76	0,82	0,83	0,87	10000	20	35°C
10	7,5	7	2840	78	80	81	0,80	0,87	0,87	10000	20	35°C
12,5	9	21	2825	83	84	82	0,82	0,84	0,88	10000	20	35°C
15	11	24	2855	73	79	81	0,84	0,86	0,88	10000	20	35°C
17,5	13	27	2850	84	85	84	0,82	0,88	0,89	10000	20	35°C
20	15	31,5	2820	83	83	84	0,82	0,84	0,86	10000	20	35°C
25	18,5	38	2850	83	83	84	0,78	0,85	0,89	10000	20	35°C
30	22	46	2890	82	86	88	0,75	0,84	0,88	10000	20	35°C
400 V												
7,5	5,5	12,5	2855	67	74	76	0,83	0,84	0,89	10000	20	35°C
10	7,5	16	2850	80	81	81	0,74	0,83	0,88	10000	20	35°C
12,5	9	20	2855	79	84	84	0,79	0,85	0,86	10000	20	35°C
15	11	23	2860	79	83	83	0,77	0,84	0,88	10000	20	35°C
17,5	13	26,5	2870	81	85	86	0,78	0,85	0,88	10000	20	35°C
20	15	30	2850	84	86	86	0,80	0,85	0,87	10000	20	35°C
25	18,5	37	2895	83	84	86	0,72	0,82	0,86	10000	20	35°C
30	22	45,5	2895	86	89	89	0,65	0,77	0,84	10000	20	35°C
415 V												
7,5	5,5	12	2845	75	79	79	0,75	0,83	0,88	10000	20	35°C
10	7,5	16	2850	77	81	82	0,69	0,80	0,85	10000	20	35°C
12,5	9	20	2860	71	79	81	0,76	0,84	0,87	10000	20	35°C
15	11	23	2870	79	83	84	0,71	0,81	0,86	10000	20	35°C
17,5	13	26	2880	74	81	85	0,75	0,82	0,85	10000	20	35°C
20	15	29	2900	86	87	88	0,81	0,88	0,88	10000	20	35°C
25	18,5	36,5	2890	82	85	85	0,66	0,77	0,85	10000	20	35°C
30	22	46	2900	84	88	89	0,60	0,73	0,80	10000	20	35°C

6” 60 HZ

3*220 / 3*380 / 3*460 V

Power		In [A]	rpm [min-1]	Verim η (eff.)			Cos φ (PF)			Eksenel Yük *Ax. Load*	Maximum	
HP	kW			%50	%75	%100	%50	%75	%100		Yol Verme *Start*	Su Sıcak. *Water Temp.*
3*220 V												
7,5	5,5	22,5	3440	71	74	75	0,83	0,85	0,86	10000	20	35°C
10	7,5	28	3440	73	77	79	0,84	0,85	0,85	10000	20	35°C
12,5	9	33,5	3450	76	77	80	0,82	0,84	0,86	10000	20	35°C
15	11	38	3440	75	78	81	0,85	0,87	0,88	10000	20	35°C
17,5	13	44,5	3450	78	80	82	0,84	0,86	0,87	10000	20	35°C
20	15	52	3445	78	81	83	0,85	0,88	0,89	10000	20	35°C
25	18,5	64,5	3455	79	83	84	0,84	0,84	0,86	10000	20	35°C
30	22	76,5	3450	80	82	84	0,84	0,86	0,87	10000	20	35°C
3*380 V												
7,5	5,5	13,6	3440	72	74	75	0,84	0,84	0,85	10000	20	35°C
10	7,5	17,5	3450	63	71	78	0,82	0,84	0,86	10000	20	35°C
12,5	9	20,5	3440	70	76	79	0,85	0,85	0,86	10000	20	35°C
15	11	24,6	3450	80	81	80	0,87	0,87	0,87	10000	20	35°C
17,5	13	27	3445	80	82	82	0,86	0,87	0,88	10000	20	35°C
20	15	30,5	3450	77	81	83	0,87	0,87	0,88	10000	20	35°C
25	18,5	38	3455	78	83	84	0,86	0,88	0,89	10000	20	35°C
30	22	44,5	3450	79	82	84	0,85	0,87	0,89	10000	20	35°C
3*460 V												
7,5	5,5	11	3440	71	74	76	0,83	0,84	0,84	10000	20	35°C
10	7,5	14,5	3445	71	75	77	0,85	0,85	0,85	10000	20	35°C
12,5	9	18,5	3440	72	75	78	0,82	0,82	0,83	10000	20	35°C
15	11	20	3440	71	76	79	0,82	0,84	0,84	10000	20	35°C
17,5	13	24	3440	74	78	80	0,86	0,88	0,89	10000	20	35°C
20	15	26,5	3450	77	80	81	0,86	0,87	0,88	10000	20	35°C
25	18,5	32,5	3440	76	80	81	0,86	0,86	0,88	10000	20	35°C
30	22	38,5	3440	77	81	83	0,84	0,85	0,86	10000	20	35°C

ÜSTÜNEL
Dalgıç Pompa-Submersible Pump

SU SOĞUTMALI DALGIÇ MOTORLAR

WATER FILLED SUBMERSIBLE MOTORS

Member of CEBQ Federation
RINA CERTIFIED MANAGEMENT SYSTEM
ISO 9001 - ISO 14001
ISO 45001
TSE
Europump
CE
TÜRKAK
POMSAD

Teknik Özellikler

Su Soğutmalı
Sarılabilir Tip Motor
NEMA Standardına Uygun Flanş
Dikey ve Yatay Çalışabilme
Çift Yönlü Çalışabilme (saat yönünde ve tersi yönde)
Soft Starter ile Çalışmaya Uygun
Frekans Konvertörü ile 30 Hz üzerinde değişken hızlarda çalışabilme

Technical Specifications

Water Cooled
Rewindable Motor
NEMA Standard Flange
Vertical and Horizontal Operation
Bidirectional Operation (CW & CCW direction of rotation)
Soft Starter Operation Possibility
Variable speed operation possibility by variable frequency drive (VFD) (over 30 Hz)

Çalışma Koşulları

Maksimum Su Sıcaklığı	35°C
Motor Koruma Sınıfı	IP68
Frekans	50 Hz 2900 d/dk, 60 Hz 3450 d/dk
Voltaj	380-400-415V/50 Hz, 460V/60 Hz
Voltaj Toleransı	-%10 +%6
Maksimum Daldırma Derinliği	600 m.

Operating Conditions

Max. Water Temperature	*35°C*
Motor Protection Class	*IP68*
Frequency	*50 Hz 2900 rpm, 60 Hz 3450 rpm*
Voltage	*380-400-415 V/50 Hz, 460 V/60 Hz*
Voltage Tolerance	*-10% +6%*
Max. Immersion Depth	*600 m.*

Motor Çeşitleri / *Motor Range*

Motor Ölçüsü	Motor Dimensions	6“	7“	8“	10“	12“
Motor Gücü (kW)	*Motor Power (kW)*	4-45	22-60	22-110	75-185	185-300
Maks. Kalkış sayısı (kalkış/sa)*	*Max. Start Number (start/h)**	15	10	8	6	5
Eksenel Yük Taşıma Kapasitesi (kN)	*Axial Thrust Load Capacity (kN)*	27,5	45	45 (22-52kW) 60 (55-110kW)	60 (77-110kW) 75 (130-185kW)	75
Dikey Kurulum (kW)	*Vertical Installation (kW)*	37-45	22-60	22-110	75-185	185-300
Yatay Kurulum (kW)	*Horizontal Installation (kW)*	4-30	22-45	22-81	75-100	185-220

*2 Çalıştırma arasında en az 3 dakika olmalıdır.

**There should be at least 3 minutes between 2 starts.*

Opsiyonel

Korozyona dayanıklı malzeme seçeneği (AISI 304, AISI 316, Bronz)
Sıcak su uygulamaları için bobin teli
PT100 Isı Sensörü
SiC Mekanik Keçe (IP68)
Yol Verme Şekli: Direkt veya Dual Voltaj
Maksimum Su Sıcaklığı 50°C Pe2Pa için

Optional

Optional high corrosion resistance materials (AISI 304, AISI 316, Bronze)
Winding wire for hot water applications
PT100 Temperature Sensor
SiC Mechanical Seal
Starting: DOL or Dual Voltage
Maximum Water Temperature 50°C for Pe2/Pa

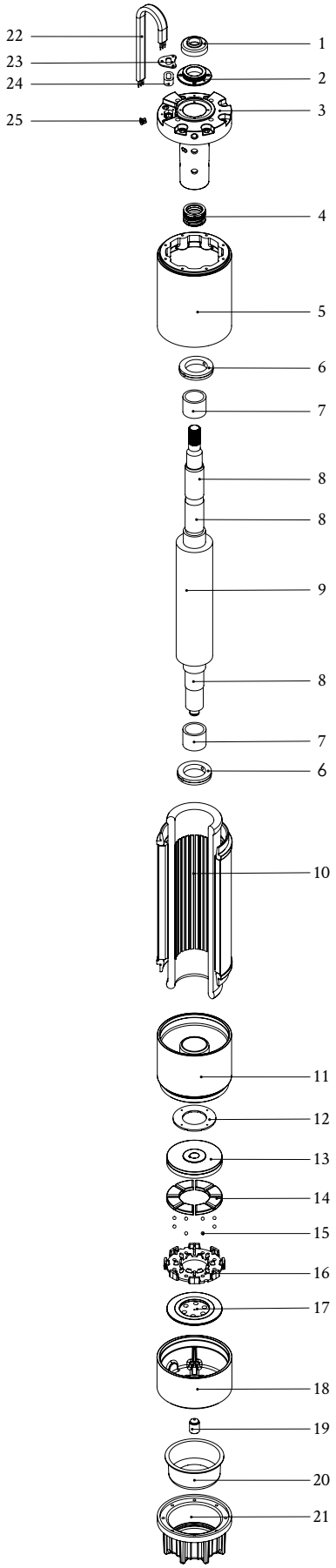

No	Ürün	Malzeme
1	Kum Tutucu	Kauçuk (NBR)
2	Keçe Koruyucu Sac	Paslanmaz Çelik (AISI 420)
3	Üst Kapak	Döküm (EN-GJL-250)
4	Mekanik Keçe	Seramik Karbon
5	Üst Ara Kapak	Döküm (EN-GJL-250)
6	Balans Parçası	Çelik (St37)
7	Radyal Yatak (Karbon Burç)	Karbon
8	Mil Burcu	Paslanmaz Çelik (AISI 304)
9	Rotor	Silisli Sac
10	Statör	Silisli Sac
11	Alt Ara Kapak	Döküm (EN-GJL-250)
12	Burç Koruyucu	POM
13	Eksenel Karbon Yatak (Balata)	Paslanmaz Çelik (AISI 420)
14	Eksenel Yatak Üçgeni	Paslanmaz Çelik (AISI 420)
15	Eksenel Yatak Bilya	Paslanmaz Çelik (AISI 304)
16	Eksenel Yatak Taşıyıcı	Bronz
17	Eksenel Yatak Altı	Paslanmaz Çelik (AISI 420)
18	Taşıyıcı Alt Kapak	Döküm (EN-GJL-250)
19	Boy Ayar Civatası	Paslanmaz Çelik (AISI 304)
20	Membran	Kauçuk (NBR)
21	Alt Kapak	Döküm (EN-GJL-250)
22	Çıkış Kablosu	PVC
23	Kablo Tutucu Sac	Paslanmaz Çelik (AISI 304)
24	Kablo Tutucu Lastik	Kauçuk (NBR)

No	Components	Material
1	Sand Guard	Rubber (NBR)
2	Seal Cover	Stainless Steel (AISI 420)
3	Upper Cover	Cast Iron (EN-GJL-250)
4	Mechanical Seal	Seramic Carbon
5	Upper Support Cover	Cast Iron (EN-GJL-250)
6	Balance Ring	Steel (St37)
7	Radial Bearing	Carbon
8	Shaft Sleeve	Stainless Steel (AISI 304)
9	Rotor	Electrical Steel
10	Stator	Electrical Steel
11	Lower Support Cover	Cast Iron (EN-GJL-250)
12	Bearing Support	POM
13	Axial Thrust Bearing	Stainless Steel (AISI 420)
14	Axial Bearing Triangle	Stainless Steel (AISI 420)
15	Axial Bearing Ball	Stainless Steel (AISI 304)
16	Axial Bearing Support	Bronze
17	Axial Bearing Bottom	Stainless Steel (AISI 420)
18	Carrier Lower Cover	Cast Iron (EN-GJL-250)
19	Adjustment Screw	Stainless Steel (AISI 304)
20	Membrane	Rubber (NBR)
21	Lower Cover	Cast Iron (EN-GJL-250)
22	Outlet Cable	PVC
23	Cable Holder Sheet	Stainless Steel (AISI 304)
24	Cable Holder Rubber	Rubber (NBR)

6“ Motor

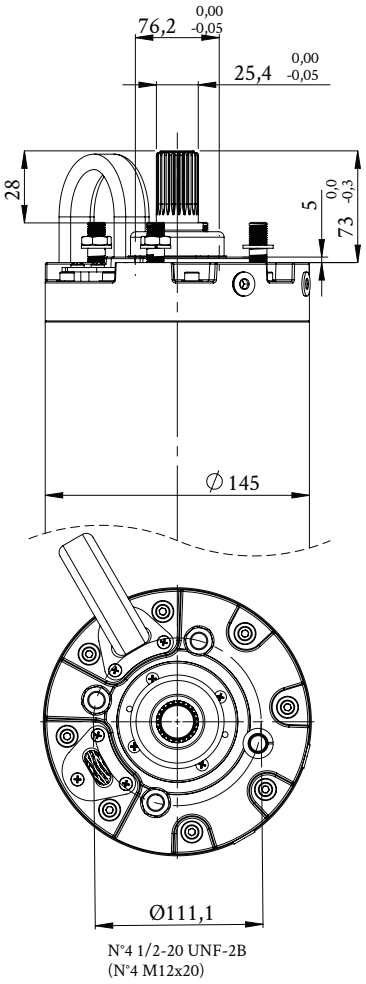

7“ Motor

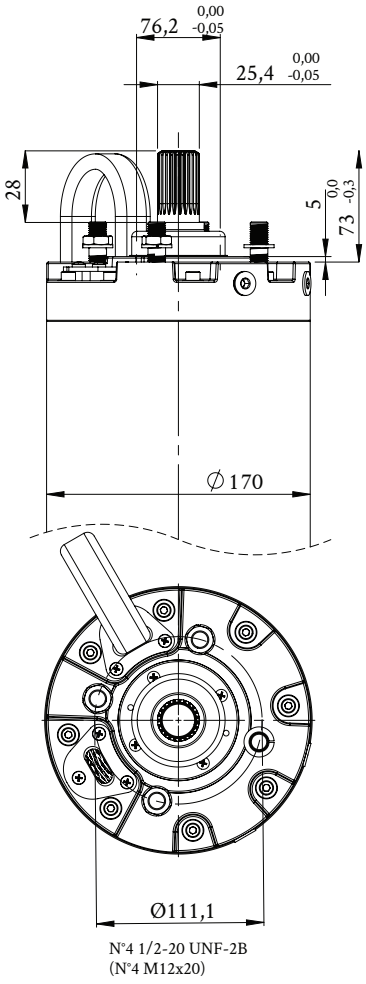

8“ Motor

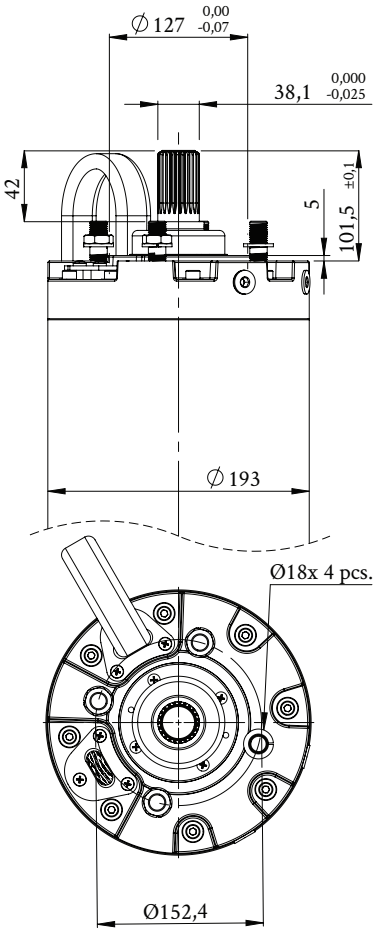

10“ Motor

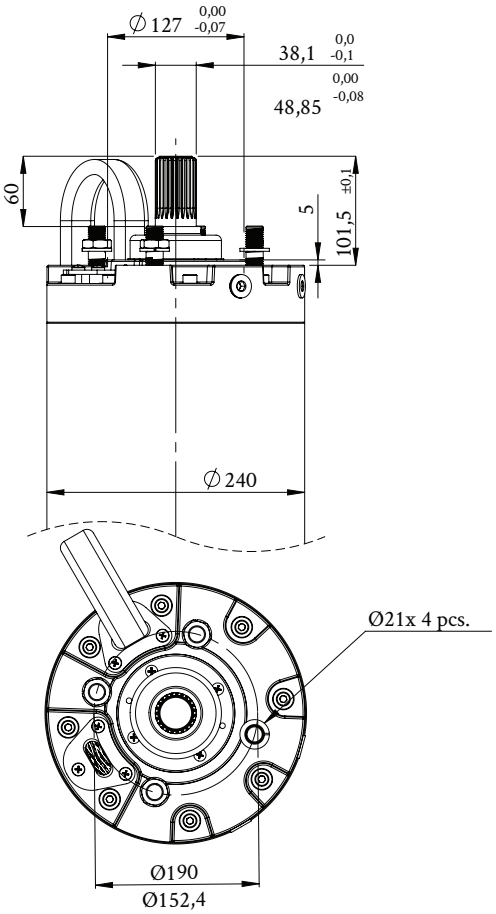

12“ Motor

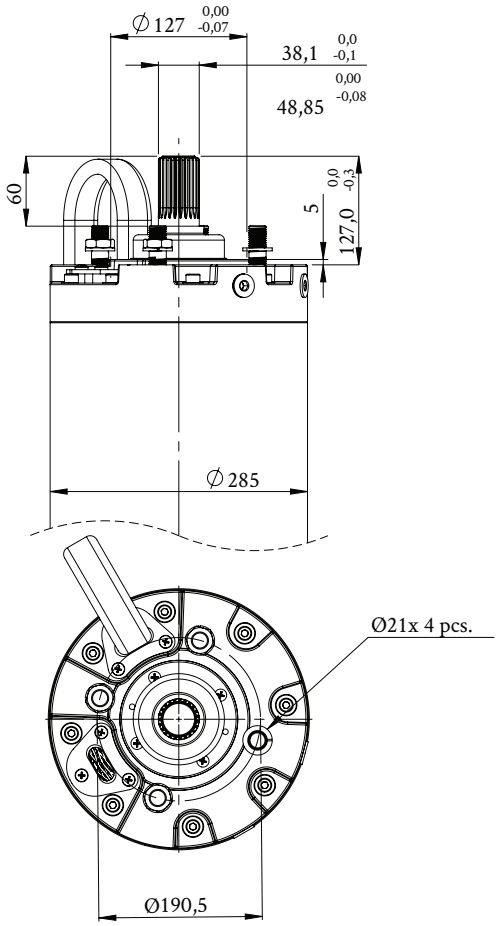

Motor Tipi *Motor Type*	Ölçü *Size*	Power		Direkt *(D.O.L.)*		Yıldız Üçgen *Star Delta*		Eksenel Yük *Ax. Load*	Yol Verme *Start*	Boy *Lenght*	Ağırlık *Weight*
		HP	kW	mm²	n	mm²	n	kN	Start /h	mm	kg
S145MC/05	6”	5,5	4	3x2,5	1	3x2,5	2	35	20	625	46
S145MC/07	6”	7,5	5,5	3x2,5	1	3x2,5	2	35	20	625	46
S145MC/10	6”	10	7,5	3x2,5	1	3x2,5	2	35	20	660	50
S145MC/12	6”	12,5	9	3x2,5	1	3x2,5	2	35	20	705	55
S145MC/15	6”	15	11	3x4	1	3x2,5	2	35	20	750	61
S145MC/17	6”	17,5	13	3x4	1	3x2,5	2	35	20	800	66
S145MC/20	6”	20	15	3x6	1	3x2,5	2	35	20	850	72
S145MC/25	6”	25	18,5	3x6	1	3x4	2	35	20	930	81
S145MC/30	6”	30	22	3x6	1	3x4	2	35	20	1010	90
S145MC/35	6”	35	26	3x10	1	3x4	2	35	20	1050	94
S145MC/40	6”	40	30	3x10	1	3x6	2	35	20	1100	100
S145MC/50	6”	50	37	3x16	1	3x6	2	35	20	1180	107
S145MC/60	6”	60	45	3x16	1	3x6	2	35	20	1325	123
S170MC/25	7”	25	18,5	3x10	1	3x6	2	45	17	835	91
S170MC/30	7”	30	22	3x10	1	3x6	2	45	17	880	98
S170MC/35	7”	35	26,5	3x10	1	3x6	2	45	17	935	105
S170MC/40	7”	40	30	3x10	1	3x6	2	45	17	975	110
S170MC/50	7”	50	37	3x10	1	3x6	2	45	17	1055	127
S170MC/60	7”	60	45	3x16	1	3x6	2	45	17	1135	139
S170MC/70	7”	70	52	3x16	1	3x6	2	45	17	1215	149
S170MC/75	7”	75	55	3x16	1	3x10	2	45	17	1270	155
S170MC/80	7”	80	60	3x16	1	3x10	2	45	17	1325	160
S190MC/30	8”	30	22	3x10	1	3x6	2	60	15	830	110
S190MC/35	8”	35	26,5	3x10	1	3x6	2	60	15	935	115
S190MC/40	8”	40	30	3x10	1	3x10	2	60	15	910	120
S190MC/50	8”	50	37	3x10	1	3x10	2	60	15	990	137
S190MC/60	8”	60	45	3x16	1	3x10	2	60	15	106	152
S190MC/70	8”	70	52	3x16	1	3x10	2	60	15	1130	167
S190MC/75	8”	75	55	3x16	1	3x10	2	60	15	1170	174
S190MC/80	8”	80	60	3x16	1	3x10	2	60	15	1200	182
S190MC/85	8”	85	63	3x16	1	3x10	2	60	15	1250	187
S190MC/90	8”	90	67	3x25	1	3x16	2	60	15	1300	203
S190MC/100	8”	100	75	3x25	1	3x16	2	60	15	1350	212
S190MC/110	8”	110	81	3x25	1	3x16	2	60	15	1400	224
S190MC/125	8”	125	92	3x25	1	3x25	2	60	15	1470	243
S190MC/150	8”	150	110	3x25	1	3x25	2	60	15	1560	260
S250MC/100	10”	100	75	3x35	1	3x25	2	75	10	1230	306
S250MC/110	10”	110	81	3x35	1	3x25	2	75	10	1295	316
S250MC/125	10”	125	92	3x35	1	3x25	2	75	10	1360	326
S250MC/150	10”	150	110	3x35	1	3x25	2	75	10	1490	362
S250MC/180	10”	180	130	3x50	1	3x25	2	75	10	1700	413
S250MC/200	10”	200	150	3x50	1	3x35	2	75	10	1805	443
S250MC/230	10”	230	170	3x75	1	3x35	2	75	10	1910	495
S250MC/250	10”	250	185	3x75	1	3x50	2	75	10	2065	515

380 / 400 / 415 V — 6” 50 HZ

Power HP	Power kW	In [A]	rpm [min-1]	Verim η (eff.) %50	Verim η (eff.) %75	Verim η (eff.) %100	Cos φ (PF) %50	Cos φ (PF) %75	Cos φ (PF) %100	Eksenel Yük *Ax. Load*	Maximum Yol Verme *Start*	Maximum Su Sıcak. *Water Temp.*
380 V												
5,5	4	10,3	2870	65	73	75	0,62	0,70	0,77	35000	20	30°C
7,5	5,5	13,5	2860	67	76	76	0,70	0,77	0,84	35000	20	30°C
10	7,5	17,2	2880	73	79	81	0,64	0,74	0,81	35000	20	30°C
12,5	9	21,0	2870	77	80	81	0,64	0,75	0,82	35000	20	30°C
15	11	24,0	2875	81	84	84	0,72	0,81	0,86	35000	20	30°C
17,5	13	28,5	2875	80	83	83	0,72	0,82	0,86	35000	20	30°C
20	15	32,0	2880	81	84	85	0,70	0,79	0,85	35000	20	30°C
25	18,5	41,0	2890	82	85	85	0,67	0,77	0,83	35000	20	30°C
30	22	49,0	2880	82	86	86	0,67	0,77	0,83	35000	20	30°C
35	26	56,0	2885	84	86	86	0,70	0,79	0,84	35000	20	30°C
40	30	65,0	2895	83	86	86	0,72	0,74	0,82	35000	20	30°C
50	37	76,0	2890	86	87	87	0,74	0,83	0,88	35000	20	30°C
60	45	91,0	2860	85	86	85	0,72	0,82	0,87	35000	20	30°C
400 V												
5,5	4	10,2	2875	68	73	75	0,61	0,68	0,76	35000	20	30°C
7,5	5,5	13,3	2860	70	73	76	0,62	0,75	0,82	35000	20	30°C
10	7,5	17,5	2890	70	76	79	0,59	0,69	0,77	35000	20	30°C
12,5	9	20,8	2885	76	81	81	0,59	0,69	0,77	35000	20	30°C
15	11	23,5	2880	76	82	83	0,69	0,78	0,83	35000	20	30°C
17,5	13	27,5	2890	81	84	84	0,68	0,78	0,84	35000	20	30°C
20	15	31,5	2885	79	82	83	0,65	0,76	0,82	35000	20	30°C
25	18,5	40	2890	81	85	85	0,61	0,72	0,79	35000	20	30°C
30	22	48,5	2895	82	85	86	0,64	0,74	0,80	35000	20	30°C
35	26	54	2900	82	85	85	0,65	0,73	0,82	35000	20	30°C
40	30	64,5	2895	83	86	86	0,71	0,70	0,82	35000	20	30°C
50	37	75	2900	83	86	86	0,71	0,80	0,86	35000	20	30°C
60	45	88	2880	84	86	87	0,70	0,79	0,84	35000	20	30°C
415 V												
5,5	4	10	2880	64	71	75	0,60	0,64	0,74	35000	20	30°C
7,5	5,5	13	2870	68	75	76	0,57	0,69	0,77	35000	20	30°C
10	7,5	17,6	2890	70	75	78	0,54	0,63	0,75	35000	20	30°C
12,5	9	21,3	2880	73	78	80	0,52	0,65	0,74	35000	20	30°C
15	11	23,3	2890	79	82	82	0,61	0,73	0,81	35000	20	30°C
17,5	13	26	2890	80	83	84	0,63	0,74	0,80	35000	20	30°C
20	15	31,5	2890	81	83	84	0,60	0,72	0,79	35000	20	30°C
25	18,5	40	2900	80	84	86	0,67	0,75	0,77	35000	20	30°C
30	22	48,5	2900	81	85	86	0,62	0,70	0,78	35000	20	30°C
35	26	53	2905	81	84	85	0,60	0,73	0,80	35000	20	30°C
40	30	65	2910	80	83	86	0,65	0,68	0,76	35000	20	30°C
50	37	75	2905	84	86	86	0,74	0,78	0,84	35000	20	30°C
60	45	86	2900	84	86	87	0,68	0,74	0,82	35000	20	30°C

6” 60 HZ

3*220 / 3*380 / 3*460 V

Power HP	Power kW	In [A]	rpm [min-1]	Verim η (eff.) %50	Verim η (eff.) %75	Verim η (eff.) %100	Cos φ (PF) %50	Cos φ (PF) %75	Cos φ (PF) %100	Eksenel Yük *Ax. Load*	Maximum Yol Verme *Start*	Maximum Su Sıcak. *Water Temp.*
3*220 V												
5,5	4	17,6	3450	72	75	76	0,64	0,74	0,8	35000	20	30°C
7,5	5,5	23,4	3455	76	77	78	0,64	0,73	0,81	35000	20	30°C
10	7,5	31	3460	73	78	79	0,76	0,82	0,85	35000	20	30°C
12,5	9	38,8	3455	78	80	81	0,68	0,78	0,83	35000	20	30°C
15	11	46,5	3470	78	81	83	0,79	0,85	0,88	35000	20	30°C
17,5	13	54,3	3450	81	83	83	0,69	0,79	0,85	35000	20	30°C
20	15	62	3455	80	84	85	0,79	0,84	0,88	35000	20	30°C
25	18,5	77,5	3470	80	82	84	0,79	0,85	0,88	35000	20	30°C
30	22	93	3470	83	87	87	0,78	0,86	0,89	35000	20	30°C
35	26	108,5	3455	83	85	86	0,72	0,83	0,87	35000	20	30°C
40	30	124	3465	86	88	89	0,78	0,84	0,88	35000	20	30°C
50	37	155	3470	88	89	88	0,81	0,87	0,89	35000	20	30°C
60	45	188	3460	88	87	88	0,85	0,86	0,87	35000	20	30°C
3*380 V												
4	5,5	9,5	3455	68	74	77	0,69	0,71	0,79	35000	20	30°C
5,5	7,5	12,4	3460	71	76	78	0,74	0,83	0,87	35000	20	30°C
7,5	10	16,5	3470	74	79	81	0,77	0,82	0,85	35000	20	30°C
9	12,5	20	3460	79	81	83	0,70	0,80	0,86	35000	20	30°C
11	15	24	3450	78	82	82	0,79	0,84	0,88	35000	20	30°C
13	17,5	28,2	3455	82	84	84	0,79	0,87	0,87	35000	20	30°C
15	20	32	3460	82	85	85	0,79	0,85	0,88	35000	20	30°C
18,5	25	40	3465	84	87	87	0,77	0,84	0,87	35000	20	30°C
22	30	48,5	3470	81	84	85	0,79	0,86	0,89	35000	20	30°C
26	35	56	3460	86	87	88	0,73	0,77	0,87	35000	20	30°C
30	40	64	3475	88	89	90	0,78	0,84	0,87	35000	20	30°C
37	50	80	3470	87	88	89	0,80	0,86	0,88	35000	20	30°C
45	60	96	3465	87	88	88	0,85	0,86	0,86	35000	20	30°C
3*460 V												
4	5,5	8,3	3470	67	71	74	0,68	0,79	0,84	35000	20	30°C
5,5	7,5	10,8	3475	66	73	75	0,70	0,80	0,85	35000	20	30°C
7,5	10	14	3460	72	74	77	0,72	0,79	0,85	35000	20	30°C
9	12,5	17,5	3465	73	77	79	0,70	0,78	0,84	35000	20	30°C
11	15	21	3470	74	77	81	0,69	0,79	0,86	35000	20	30°C
13	17,5	24,2	3470	77	77	80	0,71	0,78	0,84	35000	20	30°C
15	20	26,5	3475	76	79	82	0,71	0,81	0,85	35000	20	30°C
18,5	25	33	3465	77	81	83	0,72	0,81	0,86	35000	20	30°C
22	30	38	3470	81	83	85	0,73	0,82	0,86	35000	20	30°C
26	35	45	3470	80	83	84	0,70	0,80	0,85	35000	20	30°C
30	40	51,4	3480	73	82	85	0,74	0,82	0,85	35000	20	30°C
37	50	61,5	3465	84	85	86	0,77	0,87	0,87	35000	20	30°C
45	60	73	3460	83	84	87	0,78	0,84	0,86	35000	20	30°C

380 / 400 / 415 V 7” 50 HZ

Power		In [A]	rpm [min-1]	Verim η (eff.)			Cos φ (PF)			Eksenel Yük *Ax. Load*	Maximum	
HP	kW			%50	%75	%100	%50	%75	%100		Yol Verme *Start*	Su Sıcak. *Water Temp.*
380 V												
30	22	47	2885	80	81	82	0,71	0,81	0,84	45000	15	35°C
35	26,5	55	2880	80	81	81	0,70	0,82	0,85	45000	15	35°C
40	30	65	2890	81	82	82	0,69	0,80	0,84	45000	15	35°C
50	37	75	2895	80	81	82	0,80	0,82	0,86	45000	15	35°C
60	45	90	2890	80	80	81	0,79	0,83	0,86	45000	15	35°C
70	52	104	2885	81	81	82	0,79	0,85	0,88	45000	15	35°C
75	55	110	2895	80	80	81	0,78	0,84	0,87	45000	15	35°C
80	60	128	2890	80	81	82	0,77	0,88	0,88	45000	15	35°C
400 V												
30	22	46	2885	84	86	86	0,70	0,80	0,83	45000	15	35°C
35	26,5	53	2885	83	86	86	0,73	0,81	0,84	45000	15	35°C
40	30	62	2890	85	87	88	0,72	0,81	0,82	45000	15	35°C
50	37	73	2895	86	87	87	0,69	0,80	0,83	45000	15	35°C
60	45	89	2895	85	88	88	0,74	0,81	0,83	45000	15	35°C
70	52	102	2890	85	87	88	0,73	0,84	0,84	45000	15	35°C
75	55	108	2900	84	86	87	0,73	0,84	0,84	45000	15	35°C
80	60	127	2890	85	87	88	0,71	0,85	0,85	45000	15	35°C
415 V												
30	22	44	2890	86	87	87	0,74	0,80	0,83	45000	15	35°C
35	26,5	52	2890	85	86	86	0,77	0,82	0,84	45000	15	35°C
40	30	60	2895	84	86	87	0,77	0,80	0,81	45000	15	35°C
50	37	72	2900	84	87	88	0,79	0,81	0,83	45000	15	35°C
60	45	87	2895	85	88	88	0,75	0,80	0,82	45000	15	35°C
70	52	101	2890	84	88	89	0,76	0,79	0,83	45000	15	35°C
75	55	107	2905	85	87	88	0,74	0,81	0,83	45000	15	35°C
80	60	124	2895	86	88	89	0,74	0,82	0,84	45000	15	35°C

7” 60 HZ

3*380 / 3*460 V

Power		In [A]	rpm [min-1]	Verim η (eff.)			Cos φ (PF)			Eksenel Yük *Ax. Load*	Maximum	
HP	kW			%50	%75	%100	%50	%75	%100		Yol Verme *Start*	Su Sıcak. *Water Temp.*
3*380 V												
30	22	46,5	3480	84	84	86	0,81	0,82	0,86	45000	15	35°C
35	26,5	54	3485	84	86	86	0,81	0,81	0,85	45000	15	35°C
40	30	63	3475	83	85	85	0,82	0,84	0,87	45000	15	35°C
50	37	74	3480	86	86	87	0,83	0,85	0,88	45000	15	35°C
60	45	88	3490	83	85	85	0,82	0,85	0,88	45000	15	35°C
70	52	104	3485	84	84	86	0,81	0,84	0,87	45000	15	35°C
75	55	108	3480	85	86	87	0,81	0,84	0,86	45000	15	35°C
80	60	125	3485	86	86	87	0,82	0,85	0,88	45000	15	35°C
3*460 V												
30	22	42	3490	81	84	86	0,72	0,80	0,84	45000	15	35°C
35	26,5	50	3495	82	84	85	0,71	0,79	0,83	45000	15	35°C
40	30	58	3495	81	82	84	0,73	0,80	0,84	45000	15	35°C
50	37	68	3500	83	85	86	0,72	0,81	0,84	45000	15	35°C
60	45	62	3490	84	84	86	0,71	0,80	0,83	45000	15	35°C
70	52	96	3490	83	85	85	0,70	0,79	0,82	45000	15	35°C
75	55	99	3495	82	84	86	0,71	0,79	0,82	45000	15	35°C
80	60	118	3490	85	86	87	0,73	0,81	0,83	45000	15	35°C

380 / 400 / 415 V — 8” 50 HZ

Power HP	Power kW	In [A]	rpm [min-1]	Verim η (eff.) %50	Verim η (eff.) %75	Verim η (eff.) %100	Cos φ (PF) %50	Cos φ (PF) %75	Cos φ (PF) %100	Eksenel Yük *Ax. Load*	Maximum Yol Verme *Start*	Maximum Su Sıcak. *Water Temp.*
380 V												
30	22	48	2875	78	81	85	0,76	0,81	0,84	60000	15	45°C
40	30	63	2870	78	82	86	0,76	0,82	0,84	60000	15	45°C
50	37	78	2870	79	83	85	0,77	0,83	0,85	60000	15	45°C
60	45	91	2880	80	84	86	0,78	0,84	0,86	60000	15	45°C
70	52	103	2875	82	87	88	0,79	0,84	0,86	60000	15	45°C
75	55	111	2900	84	87	89	0,80	0,84	0,86	60000	15	45°C
80	60	119	2890	84	88	89	0,75	0,81	0,85	60000	15	45°C
85	63	128	2900	86	89	89	0,77	0,84	0,86	60000	15	45°C
90	67	132	2895	86	87	88	0,78	0,83	0,87	60000	15	45°C
100	75	150	2900	87	89	89	0,78	0,84	0,86	60000	15	45°C
110	81	166	2905	87	90	90	0,80	0,85	0,87	60000	15	45°C
125	92	184	2900	88	90	91	0,75	0,82	0,85	60000	15	45°C
150	110	216	2890	90	91	91	0,86	0,88	0,88	60000	15	45°C
400 V												
30	22	47	2880	75	80	85	0,69	0,78	0,82	60000	15	45°C
40	30	62	2875	77	81	86	0,71	0,79	0,83	60000	15	45°C
50	37	76	2900	76	82	85	0,72	0,79	0,83	60000	15	45°C
60	45	89	2890	80	84	87	0,74	0,81	0,84	60000	15	45°C
70	52	101	2875	82	87	88	0,74	0,81	0,85	60000	15	45°C
75	55	109	2905	84	87	88	0,75	0,82	0,85	60000	15	45°C
80	60	118	2895	83	88	89	0,69	0,77	0,82	60000	15	45°C
85	63	125	2900	85	89	90	0,72	0,80	0,84	60000	15	45°C
90	67	131	2895	86	90	90	0,72	0,79	0,84	60000	15	45°C
100	75	148	2905	86	89	90	0,73	0,80	0,84	60000	15	45°C
110	81	163	2910	86	89	90	0,76	0,82	0,86	60000	15	45°C
125	92	180	2905	87	90	91	0,69	0,78	0,82	60000	15	45°C
150	110	212	2890	90	90	91	0,84	0,85	0,88	60000	15	45°C
415 V												
30	22	47	2885	75	81	84	0,65	0,74	0,80	60000	15	45°C
40	30	61	2880	77	82	84	0,64	0,73	0,80	60000	15	45°C
50	37	76	2905	77	81	85	0,66	0,75	0,80	60000	15	45°C
60	45	80	2910	79	84	87	0,68	0,76	0,81	60000	15	45°C
70	52	100	2900	82	86	89	0,69	0,78	0,82	60000	15	45°C
75	55	108	2910	83	87	88	0,70	0,76	0,83	60000	15	45°C
80	60	118	2900	83	88	89	0,63	0,73	0,79	60000	15	45°C
85	63	124	2910	85	87	90	0,66	0,76	0,81	60000	15	45°C
90	67	130	2900	85	88	89	0,67	0,75	0,82	60000	15	45°C
100	75	147	2910	86	90	91	0,67	0,76	0,81	60000	15	45°C
110	81	161	2910	85	88	89	0,71	0,79	0,84	60000	15	45°C
125	92	178	2910	87	89	90	0,63	0,74	0,80	60000	15	45°C
150	110	208	2900	90	91	91	0,87	0,82	0,88	60000	15	45°C

8” 60 HZ

3*380 / 3*460 V

Power		In [A]	rpm [min-1]	Verim η (eff.)			Cos φ (PF)			Eksenel Yük *Ax. Load*	Maximum	
HP	kW			%50	%75	%100	%50	%75	%100		Yol Verme *Start*	Su Sıcak. *Water Temp.*
3*380 V												
30	22	48	3485	82	85	85	0,79	0,85	0,87	60000	15	45°C
40	30	66	3480	83	85	86	0,80	0,86	0,88	60000	15	45°C
50	37	79	3485	82	85	86	0,75	0,82	0,86	60000	15	45°C
60	45	96	3485	83	86	87	0,73	0,81	0,86	60000	15	45°C
70	52	112	3495	82	87	87	0,74	0,83	0,87	60000	15	45°C
75	55	120	3485	83	87	88	0,77	0,84	0,87	60000	15	45°C
80	60	127	3490	84	87	88	0,76	0,84	0,89	60000	15	45°C
85	63	135	3485	82	86	86	0,77	0,85	0,88	60000	15	45°C
90	67	144	3490	83	86	87	0,73	0,82	0,86	60000	15	45°C
100	75	158	3490	84	87	88	0,78	0,85	0,87	60000	15	45°C
110	81	172	3500	85	87	89	0,75	0,83	0,88	60000	15	45°C
125	92	198	3495	84	86	88	0,78	0,84	0,86	60000	15	45°C
150	110	218	3490	85	88	89	0,79	0,85	0,87	60000	15	45°C
3*460 V												
30	22	43	3490	75	79	81	0,73	0,80	0,84	60000	15	45°C
40	30	55	3485	80	82	83	0,70	0,79	0,84	60000	15	45°C
50	37	64	3490	82	83	85	0,71	0,81	0,85	60000	15	45°C
60	45	76	3490	82	85	85	0,72	0,82	0,86	60000	15	45°C
70	52	88	3500	83	85	86	0,69	0,80	0,86	60000	15	45°C
75	55	94	3500	83	86	86	0,70	0,82	0,87	60000	15	45°C
80	60	103	3510	83	85	87	0,69	0,81	0,85	60000	15	45°C
85	63	109	3505	82	85	87	0,70	0,83	0,86	60000	15	45°C
90	67	115	3500	82	85	86	0,71	0,84	0,87	60000	15	45°C
100	75	125	3510	83	86	87	0,68	0,79	0,86	60000	15	45°C
110	81	136	3505	84	86	88	0,69	0,80	0,87	60000	15	45°C
125	92	154	3510	85	86	88	0,71	0,83	0,88	60000	15	45°C
150	110	190	3500	86	87	88	0,73	0,84	0,88	60000	15	45°C

380 / 400 / 415 V

10” 50 HZ

Power		In [A]	rpm [min-1]	Verim η (eff.)			Cos φ (PF)			Eksenel Yük *Ax. Load*	Maximum	
HP	kW			%50	%75	%100	%50	%75	%100		Yol Verme *Start*	Su Sıcak. *Water Temp.*
380 V												
100	75	149	2900	86	88	88	0,76	0,82	0,86	75000	10	45°C
125	92	186	2905	82	86	89	0,79	0,84	0,85	75000	10	45°C
150	110	218	2900	86	87	89	0,75	0,82	0,84	75000	10	45°C
180	130	264	2910	87	88	88	0,82	0,85	0,86	75000	10	45°C
200	150	280	2915	88	89	90	0,82	0,86	0,87	75000	10	45°C
230	170	324	2915	87	88	89	0,84	0,86	0,87	75000	10	45°C
250	185	355	2920	87	89	90	0,85	0,87	0,88	75000	10	45°C
400 V												
100	75	145	2910	85	86	87	0,74	0,81	0,85	75000	10	45°C
125	92	174	2910	81	87	89	0,78	0,82	0,84	75000	10	45°C
150	110	202	2905	83	85	88	0,75	0,81	0,83	75000	10	45°C
180	130	246	2915	87	87	88	0,81	0,83	0,84	75000	10	45°C
200	150	272	2920	86	88	89	0,82	0,84	0,85	75000	10	45°C
230	170	312	2920	86	86	88	0,83	0,83	0,86	75000	10	45°C
250	185	337	2925	87	88	89	0,84	0,86	0,88	75000	10	45°C
415 V												
100	75	144	2915	85	85	86	0,73	0,81	0,85	75000	10	45°C
125	92	168	2910	81	87	88	0,76	0,80	0,83	75000	10	45°C
150	110	198	2910	82	86	88	0,72	0,81	0,83	75000	10	45°C
180	130	245	2915	86	88	89	0,78	0,80	0,82	75000	10	45°C
200	150	268	2925	85	86	88	0,80	0,83	0,84	75000	10	45°C
230	170	308	2920	85	87	88	0,82	0,84	0,84	75000	10	45°C
250	185	335	2925	87	88	89	0,81	0,82	0,86	75000	10	45°C

10” 60 HZ

3*380 / 3*460 V

Power		In [A]	rpm [min-1]	Verim η (eff.)			Cos φ (PF)			Eksenel Yük *Ax. Load*	Maximum	
HP	kW			%50	%75	%100	%50	%75	%100		Yol Verme *Start*	Su Sıcak. *Water Temp.*
3*380 V												
100	75	150	3500	88	89	88	0,78	0,81	0,87	75000	10	45°C
125	92	185	3510	87	88	89	0,80	0,83	0,88	75000	10	45°C
150	110	220	3505	88	89	90	0,79	0,83	0,87	75000	10	45°C
180	130	268	3510	88	87	89	0,80	0,84	0,88	75000	10	45°C
200	150	281	3515	87	88	89	0,78	0,84	0,88	75000	10	45°C
230	170	320	3510	87	88	89	0,79	0,83	0,87	75000	10	45°C
250	185	355	3515	89	89	90	0,79	0,85	0,89	75000	10	45°C
3*460 V												
100	75	128	3490	84	85	85	0,78	0,84	0,87	75000	10	45°C
125	92	152	3500	87	87	88	0,78	0,85	0,88	75000	10	45°C
150	110	179	3500	87	88	88	0,80	0,87	0,89	75000	10	45°C
180	130	218	3510	87	88	88	0,78	0,85	0,88	75000	10	45°C
200	150	237	3510	88	88	89	0,79	0,87	0,90	75000	10	45°C
230	170	274	3500	87	88	88	0,78	0,87	0,89	75000	10	45°C
250	185	295	3500	86	88	89	0,79	0,88	0,90	75000	10	45°C

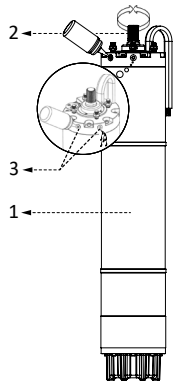

Motora Su Doldurma

Su ile soğutmalı dalgıç motorlar, sevkiyat öncesi -15°C'ye kadar donmaya karşı koruma sağlayan gliserol içeren motor sıvısı ile doldurulmaktadır.
Motor, kullanılmadan önce suyu kontrol edilmelidir. Motor (1) dik pozisyonda iken, Motor şaftının (2) her iki yönündeki serbest hareketini kontrol edilmeli ve (3)'deki civatalar sökülerek, saf su ile su gelene kadar doldurulmalıdır.

Motor Water Filling

Water filled submersible motors are filled with glycerol containing motor liquid, which provides frost protection down to -15°C before delivery.
Motors water should be controlled before operation. When motor is on vertical position (1), motor shaft (2) free rotation should be checked manually. Unscrew the screws (3) and fill the motor with pure water till water comes out.

Motor Tipi *Motor Type*	Güç *Motor (kW)*	Min. Akış Hızı *Min. Water Flow (m/s)*
6"	4-18,5	0,2
	22-45	0,5
7"	22-55	0,2
8"	22-55	0,2
	60-110	0,5
10"	81-185	0,5

Soğutma

Motorun soğutulması, motordan geçen pompa sıvısının sıcaklığına ve akış hızına bağlıdır.
30°C ortam sıcaklığında motor etrafındaki sıvı akış hızı en az 0,15m/s olmalıdır. Sıcaklık arttıkça gereken akış hızı da artmaktadır. Eğer akış hızı bu değerden küçükse soğutma ceketi kullanılmalıdır.

Coolling

The cooling of the motor depends on the temperature and the flow velocity of the pump liquid past the motor.
On an ambient temperature of 30°C, it is recommended with a minimum cooling flow min v = 0,5 m/s. If the flow is smaller, cooling jacket must be used.

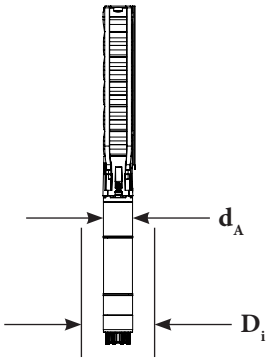

Akış Hızı Hesaplama Formülü

Soğutma akışı, aşağıdaki "akış hızı formülü" ile hesaplanabilir.

$$V = \frac{Q_{min}}{2826 \times (D_i^2 - d_A^2)} \text{ m/s}$$

Calculations of the Flow Velocity

Cooling flow can be calculated with the following "flow velocity formula".

	Gereken Veri	*Required Data*
Qmin:	Debi (m^3/s)	*Flow in m^3/h*
D_i:	Kuyu Çapı (m)	*Borehole Dia. (m)*
d_A:	Motor Çapı (m)	*Motor Dia. (m)*

Enerji Bağlantı Şeması / *Energy Connection Schema*

Direkt Yol Verme / *Energy Connection Schema*

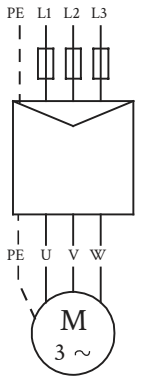

Yıldız Üçgen Yol verme / *Star Delta Starting*

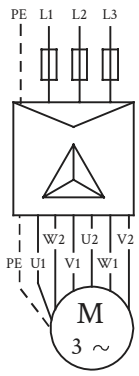

İzolasyon Direnci Testi

Dalgıç Motorlara, "*TSE 11146 Pompalar -Dalgıç-Temiz Su için*" standardı Madde 5.3.5 kapsamında, izolasyon direnci testi uygulanmaktadır. Her fazın izolasyon direnci ölçülmekte ve fazlarda kısa devre olup olmadığı kontrol edilmektedir.

Insulation Resistance Test

Submersible Motors are applied "Insulation Resistance Test" under "TSE 11146 Submersible Pumps for Clean Water" Standard Item 5.3.5. The insulation resistance of each phase is measured and it is checked whether there is a short circuit in the phases.

Soğutma Ceketi

Yatay ve dikey operasyon kullanımına uygun komple paslanmaz malzemeden yapılmış Soğutma ceketi Motor soğutmasının yetersiz kalacağı durumlarda tavsiye edilmektedir. Kullanımı sonucunda motorun çevresindeki su akışı arttırılarak motorun ömründe uzama görülecektir.

Akma gömlekleri şu gibi durumlarda kullanılmaktadır:

- Eğer dalgıç pompanın termal altında (dengesiz akım), susuz çalışma olasılığı (her 10°C paslanma olma olasılığı iki kat artacaktır) var ise,
- Eğer agresif sıvılar pompalanacak ise,
- Eğer motor keson kuyu veya bir havuza monte edilecekse veya kuyu çapı motor çapından çok büyük ise, soğutma ceketi kullanılmalıdır.

Cooling Jacket

Stainless steel cooling jacket, which is suitable for horizontal and vertical use, is recommended in cases where motor cooling is insufficient. As a result of its use the water flow around the motor will be increased and the life of the motor will be extended.

Cooling jacket should be used:

- *If the submersible pump is exposed to high thermal load like unbalanced current, dry running, overload, high ambient temperature, bad cooling conditions.*
- *If sedimentation or deposits occur around and/or on the motor.*
- *If the motor is to be installed in a caisson well or pool or if the borehole diameter is much larger than the motor cooling jacket must be used.*

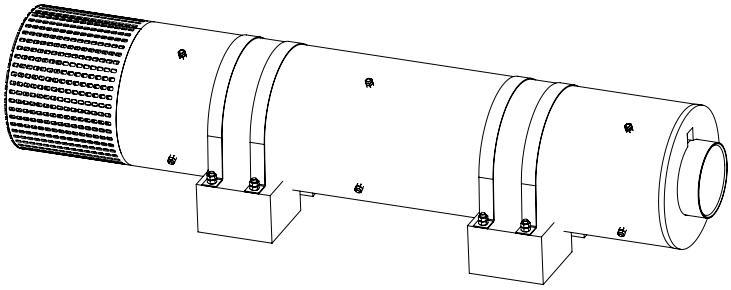

Çinko Anodlar

Uygulamalar

Çinko anodlar aşınmayı önleyici etkiye sahip olduğundan klorür içeren deniz suyu veya acı sularda kullanılabilir. Anodlar, pompa ve motorların dışında aşınmayı önleme amacıyla yerleştirilir. Yerleştirilecek anod sayısı pompa ve motorların çeşidine göre değişim göstermektedir.

Su Sıcaklığı

Deniz suyu: 30°C'ye kadar
Acı sularda (min. 1500 g/m^3 klorür): 35°C'ye kadar

Anod ömrü

Çinko anodların ömrü çalışma koşullarına göre (sıcaklık, akış, içerdiği klorür miktarı) 1 ila 4 yıldır.

Zinc Anodes

Application

Since zinc anodes have anti-corrosian effect, they may be used in sea water and brackish water containing chloride. Zinc anodes are placed on the outside of the pump and motor as protection against corrosion. The number of anodes to be installed varies in accordance with the type of pumps and motors.

Liquid Temperatures

Sea water: Up to 30°C
Brackish water (min. 1500 g/m^3 chloride): Up to 35°C.

Anod Life

The zinc anodes have a life of one to four years, depending on operating conditions (temperatures, flow, and chloride content).

Frekans Konvertörü / Soft Starter Kullanımı

- Dalgıç motorlar, frekans konvertörü ve soft starter ile aşağıdaki hususlara dikkat edilerek çalıştırılabilir;
- Motorun, ihtiyaç duyulandan bir üst güçte kullanılması, sistemin çalışma ömrünü artıracaktır.
- Motor, aşırı yüke karşı, frekans konvertörün akım sınırlayıcısını, dalgıç motorun nominal akımına ayarlanarak korunmalıdır.
- Motor düşük yük koruması normalde sistemin tipik çalışma akımının %80'inde açılacak şekilde ayarlanmalıdır. Nominal frekans aşılmamalıdır.
- İzin verilen frekans aralıkları aşağıdaki gibidir:

  50 Hz için; 30-50 Hz
  60 Hz için; 30-60 Hz

- Her iki durumda 10" gibi büyük motorlarda min. 35 Hz önerilmektedir.
- Düşük frekansta, motor hızı ve motorun etrafından geçen akış hızı azalmaktadır, dolayısıyla soğutma verimliliği de azalır. Düşük frekanslarda motorda eksenel yatakta su filmi oluşmayacağından motor zarar görebilir.
- Dolayısıyla frekansı (ve dolayısıyla hızı ve akışı), fazla azaltmamak önemlidir, çünkü motordan yeterli miktarda pompalanan sıvı akışı olması gerekir. Pompa su pompalamayı durdurursa motor durmalıdır.

Frequency Converter / Soft Starter Usage

- *Submersible motors can be operated with frequency converter and soft starter by paying attention to the following points;*
- *Using the motor at a higher power than needed, will increase the operating life of the system.*
- *The motor must be protected against overload by setting the current limiter of the frequency converter to the rated current of the submersible motor.*
- *The motor underload protection is should be set to trip at 80% of the system's typical operating current. The rated frequency must not be exceeded.*
- *The allowed frequency ranges are as follows:*

  For 50 Hz; 30-50Hz
  For 60 Hz; 30-60Hz

- *In both cases, for large motors like 10", min. 35 Hz is recommended.*
- *At low frequency, the motor speed and the flow rate around the motor are reduced, thus reducing the cooling efficiency. At low frequencies, the motor may be damaged as no water film will form on the axial bearing in the motor.*
- *It is therefore important not to reduce the frequency (and thus the speed and flow) too much, because there must be a sufficient flow of pumped fluid from the motor. If the pump stops pumping water, the motor should be stopped.*

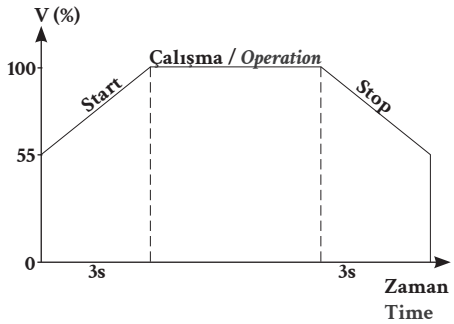

- Saatte başlatma sayısının 4'ü geçmemesi daha iyi sistem ömrü sağlar. Her durumda kapatma ile bir sonraki yeniden başlatma denemesi veya ardışık yeniden başlatma denemeleri arasında 7 dakikalık süreye izin verilmelidir.
- Start ve stop rampaları, 0-30 Hz ve 30-0 Hz için 3 saniyeyi geçmemelidir.
- Durma iki şekilde yapılabilir;
  1. Motorun güç kaynağından kapatılması ve atalet ile durdurulması. Bu durdurma modu, motoru korur ancak uygulama alanının özelliklerine bağlı olacak su darbesi görünümüne neden olabilir.
  2. Durdurma rampasının ayarlanması: Bu durumda, başlangıç rampası için verilmiş olan posterler geçerlidir.

- *Keeping the starts per hour does not exceed 4 times per hour provide better system life. In all cases a min. of 7 minutes must be allowed between a power off and the next restart attempt or consecutive restart attempts.*
- *Start and stop ramps must not exceed 3 seconds for 0-30 Hz and 30-0 Hz.*
- *The stop can be affected in two ways;*
  1. *Taking off power source from the motor and making the stop by inertia. This stop made, safeguards the motor but can cause the appearance of water hammers, depending on the characteristics of the application area.*
  2. *Settling up a stopping ramp: In this case indication already given for the starting ramp are valid.*

Arıza Tespiti ve Yapılması Gerekenler / *Detection of Malfunctioning and What to Do*

Arıza	Sebebi	Çözümü
Pompa start almıyor.	1. Elektrik yok. 2. Sigorta atık. 3. Su seviyesi düşük. 4. Mekanik arıza var.	1. Elektrik temin ediniz. 2. Sigortayı değiştiriniz. 3. Su seviyesinin, pompanın çalışma seviyesinde olduğunu kontrol ediniz. 4. Yetkili servise haber veriniz.
Termik role atıyor.	1. Termik ayarı hatalı. 2. Faz eksik veya dengesiz. 3. Motor aşırı akım çekiyor. 4. Mekanik arıza var.	3. Motopompta mekanik bir arıza vardır. Pompayı durdurunuz. 4. Yetkili servise haber veriniz.
Motor akımı sabit değil sürekli oynama var.	1. Su seviyesi kritik seviyeye düşmüştür.	1. Motopompu uygun derinliğe indiriniz ve ayar vanasını kısarak debiyi azaltınız.
Su debisi azalıyor.	1. Ayar vanası kısık. 2. Emme süzgeci veya pompa kısmen tıkanmıştır. 3. Pompada aşınma var. 4. Basınç ve motor akımı birlikte düşmüş ve oynak değilse, dinamik su seviyesi düşmüştür.	1. Pompa basıncını manometreden okuyun. Basınç değeri normal çalışma değerinden büyükse vanayı istenilen debi ve basınca ayarlayın. 2. Pompanın bakıma ihtiyacı vardır. 3. Pompa, gücüne uygun su basmaktadır. Azalmış su debisi yeterli ise çalışmaya devam ediniz. 4. Yetersizse yeni pompa alınız.

Break Down	Reason	Solution
The pump does not start.	*1. No electricity.* *2. Fuse blown.* *3. Water level is low.* *4. There is mechanical break down.*	*1. Supply electricity.* *2. Change the fuse.* *3. Control that the water level is at the working level of the pump.* *4. Inform the authorized service.*
Thermic relay discards.	*1. Thermic adjusment is wrong.* *2. Phase lack of unbalanced .* *3. The motor is pulling exceeding current.* *4. Mechanical break down.*	*3. There is a mechanical malfunction in the motor pump. Stop the pump.* *4. Inform the authorized service.*
The motor current is not stable, constantly fluctuating.	*1. The water level has dropped to the critical level.*	*1. Lower the motor pump at the appropriate depth and reduce the flow rate by reducing the valve.*
The water flowrate if decreases.	*1. Adjusment valve is closed.* *2. The suction filter of the pump is chocked partially.* *3. There is abrasion in the pump.* *4. If the pressure and motor current are dropped and not fluctuating together, dynamic water level must be dropped.*	*1. Read the pump pressure from the manometer. If the pressure level is greater than the normal operation value, adjust them to the requested flow rate and pressure value.* *2. The pump needs maintenance.* *3. The pump gives water suiting its power. If the reduced flow rate is enough, continue to operate.* *4. If it is not enough buy a new pump.*

Besleme Kablosu Seçim Tablosu / *Feeder Cable Selection Table*

Ölçü Tip *Size Type*		kW	V	In [A]	Cos 100%	Kablo Kesiti / *Cable Cross Section (3x.....mm²)*															
						1,5	2,5	4	5	10	16	25	35	50	70	95	120	150	185	240	300
						Maksimum Uzunluk / *Maximum Length*															
4”	Y	0,37	280			176	293	377													
4”	Y	0,55	280			141	235	293													
4”	Y	0,75	280	5,8	0,98	110	183	187													
4”	Y	1,1	280	8,2	0,95	70	117	143	280												
4”	Y	1,5	280	10,4	0,97	53	89	101	214												
4”	Y	2,2	280	14,7	0,99	38	63		151												
4”	Y	0,37	380	1,1	0,72	533															
4”	Y	0,55	380	1,6	0,72	366	608														
4”	Y	0,75	380	2,2	0,82	234	389	621													
4”	Y	1,1	380	3	0,83	169	282	450	672												
4”	Y	1,5	380	4	0,82	128	214	341	510	843											
4”	Y	2,2	380	5,6	0,82	92	188	302	452	602	711										
4”	Y	3	380	7,4	0,83	68	114	182	272	450	554	849									
4”	Y	4	380	9,6	0,82	53	89	142	212	351	404	622									
4”	Y	5,5	380	12,6	0,86	39	64	103	154	256	303	465	638								
4”	Y	7,5	380	17	0,85	29	48	77	116	191	556										
6”	Y	4	380	10	0,78	54	90	143	214	353	393	605									
6”	Y	5,5	380	12,7	0,88	37	63	100	150	248	306	470	647								
6”	Y	7,5	380	16,5	0,87	29	49	78	116	193	255	391	538								
6”	Y	9,2	380	20	0,86		40	65	97	161	208	321	443								
6”	Y	11	380	23,5	0,90		33	53	79	131	181	279	385	618							
6”	Y	13	380	27	0,90		28	46	69	114	158	243	335	538							
6”	Y	15	380	31	0,90			40	60	99	354	541		469	637						
6”	Y.□	11	380	23,5	0,90		57	91	136	225	308	471	642								
6”	Y.□	13	380	27	0,90		50	79	119	196	269	410	559								
6”	Y.□	15	380	31	0,90			69	103	170	216	329	447								
6”	Y.□	18,5	380	39,5	0,87			56	83	138	185	279	377	612							
6”	Y.□	22	380	48,5	0,82				72	118	155	236	321	512							
6”	Y.□	26	380	55	0,87					99	140	212	286	439	582						
6”	Y.□	30	380	64	0,82					89	113	172	234	388	509						
6”	Y.□	37	380	76	0,86					72	175	267	363	319	422	536					
8”	Y.□	22	380	48	0,89				67	111	155	236	321	499	664						
8”	Y.□	26	380	55	0,87					99	137	208	282	439	582						
8”	Y.□	30	380	63	0,86					87	113	172	234	385	510						
8”	Y.□	37	380	76	0,86						96	145	197	319	422	536					
8”	Y.□	45	380	90	0,86							127	173	270	357	453	537				
8”	Y.□	52	380	101	0,88							113	154	238	316	403	495	562			
8”	Y.□	55	380	113	0,89								133	212	282	360	430	505			
8”	Y.□	67	380	133	0,86								117	182	241	306	374	423	484	562	
8”	Y.□	75	380	150	0,87									161	213	271	332	377	431	503	
8”	Y.□	92	380	186	0,89									128	171	219	261	307	353	414	469
8”	Y.□	110	380	218	0,89								117		146	187	230	262	301	353	400
10”	Y.□	75	380	148	0,89									161	215	275	329	385	444	521	589
10”	Y.□	92	380	182	0,88									132	175	224	266	312	358	419	473
10”	Y.□	110	380	218	0,88										146	187	222	260	299	349	395
10”	Y.□	130	380	264	0,86											154	188	213	243	283	318
10”	Y.□	150	380	280	0,87											145	178	202	231	269	303
10”	Y.□	170	380	324	0,87												149	174	196	233	262
10”	Y.□	185	380	355	0,88													160	180	214	242

Maksimum kablo uzunlukları %3'lük voltaj düşmesi ve 25° sıcaklığa göre hesaplanmıştır.
Max cable lenght is calculated on a voltage drop of 3% of 25° temperature.

Farklı voltajlar için kablo uzunluğu, voltaj oranına paralel olarak artar.
For different voltages, cable lenght increases proportional to the voltage ratio.

Örneğin 415 V: L= (415/380)*x
*Example 415 V: L= (415/380)*x*

Su Miktarı / *Quantity of Water*			Normal Su Borularında Yükseklik Kayıpları / *Head Losses in Ordinary Water Pipes* Nominal Boru Çapı (mm ve inç) / *Nominal Pipe Diameter (inch and mm)*											
m^3/h	Litre/dk. Litres/min.	Litre/sn. Litres/sec.	½" 15.75	¾" 21.25	1" 27.00	1 ½" 35.75	1 ¼" 41.25	2" 52.50	2 ½" 68.00	3" 80.25	3 ½" 92.50	4" 105.0	5" 130.0	6" 155.5
0.6	10	0.16	0.855 9.910	0.470 2.407	0.292 0.784									
0.9	15	0.25	1.282 20.11	0.705 4.862	0.438 1.570	0.249 0.416								
1.2	20	0.33	1.710 33.53	0.940	0.584 2.588	0.331 0.667	0.249 0.346							
1.5	25	0.42	2.138 49.93	11.91	0.730 3.834	0.415 1.004	0.312 0.510							
1.8	30	0.50	2.565 69.34	1.409 16.50	0.876 5.277	0.498 1.379	0.374 0.700	0.231 0.223						
2.1	35	0.58	2.993 91.54	1.644 21.75	1.022 6.949	0.581 1.811	0.436 0.914	0.269 0.291						
2.4	40	0.67		1.879 27.66	1.168 8.820	0.664 2.290	0.499 1.160	0.308 0.368						
3	50	0.83		2.349 41.40	1.460 13.14	0.830 3.403	0.623 1.719	0.385 0.544	0.229 0.159					
3.6	60	1.00		2.819 57.74	1.751 18.28	0.996 4.718	0.748 2.375	0.462 0.751	0.275 0.218					
4.2	70	1.12		3.288 76.49	2.043 24.18	1.162 6.231	0.873 3.132	0.539 0.988	0.321 0.287	0.231 1.131				
4.8	80	1.33			2.335 30.87	1.328 7.940	0.997 3.988	0.616 1.254	0.367 0.363	0.263 6.164				
5.4	90	1.50			2.627 38.30	1.494 9.828	1.222 4.927	0.693 1.551	0.413 0.449	0.269 0.203				
6	100	1.67			2.919 46.49	1.660 11.90	1.247 5.972	0.770 1.875	0.459 0.542	0.329 0.244	0.248 0.124			
7.5	125	2.08			3.649 70.41	2.075 17.93	1.558 8.967	0.962 2.802	0.574 0.809	0.412 0.365	0.310 0.185	0.241 0.101		
9	150	2.50				2.490 25.11	1.870 12.53	1.154 3.903	0.668 1.124	0.494 0.506	0.372 0.256	0.289 0.140		
10.5	175	2.92				2.904 33.32	2.182 16.66	1.347 5.179	0.803 1.488	0.576 0.670	0.434 0.338	0.337 0.184		
12	200	3.33				3.319 42.75	2.493 21.36	1.539 6.624	0.918 1.901	0.659 0.855	0.496 0.431	0.385 0.234	0.251 0.084	
15	250	4.17				4.149 64.86	3.117 32.32	1.924 10.03	1.147 2.860	0.823 1.282	0.620 0.646	0.481 0.350	0.314 0.126	
18	300	5.00					3.740 45.52	2.309 14.04	1.377 4.009	0.988 1.792	0.744 0.903	0.577 4.488	0.377 0.175	0.263 0.074
24	400	6.67					4.987 78.17	3.078 24.04	1.836 6.828	1.317 3.053	0.992 1.530	0.770 0.829	0.502 0.294	0.351 0.124
30	500	8.33						3.848 36.71	2.295 10.40	1.647 4.622	1.240 2.315	0.962 1.254	0.628 0.445	0.439 0.187
36	600	10.00						4.618 51.84	2.753 14.62	1.976 6.505	1.488 3.261	1.155 1.757	0.753 0.623	0.526 0.260
42	700	11.70							3.212 19.52	2.306 8.693	1.736 4.356	1.347 2.345	0.879 0.831	0.614 0.347
48	800	13.30							3.671 25.20	2.635 11.18	1.984 5.582	1.540 3.009	1.005 1.066	0.702 0.445
54	900	15.00							4.130 31.51	2.964 13.97	2.232 6.983	1.732 3.762	1.130 1.328	0.790 0.555
60	1000	16.70							4.589 38.43	3.294 17.06	2.480 8.521	1.925 4.595	1.256 1.616	0.877 0.674
75	1250	20.80								4.117 26.10	3.100 13.00	2.406 7.010	1.570 2.458	1.097 1.027
90	1500	25.00								4.941 36.97	3.720 18.42	2.887 9.892	1.883 3.468	1.316 1.444
105	1750	29.20									4.340 24.76	3.368 13.30	2.197 4.665	1.535 1.934
120	2000	33.30									4.960 31.94	3.850 17.16	2.511 5.995	1.754 2.496
150	2500	41.70										4.812 26.26	3.139 9.216	2.193 3.807
180	3000	50.00											3.767 13.05	2.632 5.417
240	4000	66.70											5.023 22.72	3.509 8.926
300	5000	83.30												4.386 14.42
90° Dirsek Sürgülü Valf / *90° Bends Slide Valves*			1.0	1.0	1.1	1.2	1.3	1.4	1.5	1.6	1.6	1.7	2.0	2.5
T Parçası Tek Yönlü Vana / *T Pieces One Way Valves*			4.0	4.0	4.0	5.0	5.0	5.0	6.0	6.0	6.0	7.0	8.0	9.0

Yükseklik kayıp tablosu / *Table of head losses*
Normal su borularında yükseklik kayıpları / *Head losses in ordinary water pipes*
Üst rakamlar suyun hızını belirtiyor. (m/sn) / *Upper figures indicate the velocity of water in m/sec.*
Alt rakamlar düz boruların 100 mt. yükseklik kayıplarını belirtmektedir. / *Lower figures indicate head loss in meters per 100 of straight pipes.*

Bu tablo H.Lang'ın yeni formülüne (a=0.02) ve 10° su sıcaklığına göre hesaplanmıştır.
The table is calculated in accordance with H.Lang's new formula a=0,02 and for a water temperature of 10°
Dirseklerde (kıvrımlarda) sürgülü valflarda, T parçalarında ve tek yönlü vanalardaki yükseklik kayıpları, düz borularda metreye eşdeğer olarak tablonun son iki satırında belirtilmiştir. Taban valfı kayıplarını bulmak için T parçasındaki kayıpları 2 ile çarpın.
The head loss in bends, slide valves, T-pieces a non-return valves is equivalent to the metres of straight pipes started in the last two lines of the table. To find the head loss valves multiply the loss in T-pieces by two.

ÜSTÜNEL
Dalgıç Pompa-Submersible Pump

NORİL HİDROFOR POMPA

NORYL VERTICAL MULTISTAGE (VMS) PUMPS

Kullanım Yerleri

Applications

Su temini ve proses suyu transferi	*Water supply and process water transfer*
Yüksek basınçlı tıkama ve prosesler	*High pressure blocking and processes*
Yangın söndürme sistemleri	*Fire fighting systems*
Şebeke suyunun olmadığı yerleşim yerleri	*Residential units without water mains*
Park, bahçe ve çiftlikler	*Parks, gardens and farms*
Küçük su ikmal istasyonları	*Small water supply stations*
Şebeke suyunun basıncının yetmediği; çok katlı binalar, otel, hastane, okul, iş yerleri, siteler, sanayi	*Buildings where water pressure is not enough: hotel, hospital, school, work sites, sites, industrial places*

Çalışma Koşulları

Operating Conditions

Motor Gücü	0,75-2,2 kW dahil Monofaze 2,2-22 kW dahil Trifaze	*Motor Power*	*0,75-2,2 kW incl. Monophase* *2,2-22 kW incl. Triphase*
Sıvı Sıcaklığı	0°C-40°C	*Liquid Temperature*	*0°C-40°C*
Maksimum Voltaj Gerilimi	380 V (+-%5V) 220 V (+-%3V)	*Max Voltage*	*380 V (+-%5V)* *220 V (+-%3V)*
Frekans	50 Hz	*Frequency*	*50 Hz*
Devir Sayısı	2900 dev/dk.	*Rotation*	*2900 rpm*
Motor Dönüş Yönü	Saat yönünün tersine	*Motor Rotation Direction*	*Opposite direction of clockwise*
Maksimum Kum Miktarı	25 gr/m^3	*Max. Sand Content*	*25 gr/m^3*
Maksimum Çalışma Miktarı	25 bar	*Max. Operating Pressure*	*25 bar*

Pompa Çeşitleri

Pump Range

Tipi	Type	49 HSD	55 HSE	59 HSF	618 HSL	624 HSM	636 HSH
Emiş	*Suction*	1 1/4"	1 1/4"	1 1/2"	2"	2"	2"
Çıkış	*Outlet*	1 1/4"	1"	1 1/4"	1 1/2"	1 1/2"	2"
Debi (m^3/h)	*Flow (m^3/h)*	2-7	1-4	4-9	4-16	8-20	10-30
Basma Yüksekliği (m)	*Head (m)*	18-110	29-105	11-104	8-177	19-138	8-164
Motor Gücü (kW)	*Motor Power (kW)*	0,75-2,2	0,75-1,5	1,1-3	1,5-7,5	2,2-7,5	2,2-15
Pompa Mili: Paslanmaz Çelik (AISI 304)	*Pump Shaft: Stainless Steel (AISI 304)*	+	+	+	+	+	+
Kademe ve Fan: Noril	*Stage and Impeller: Noryl*	+	+	+	+	+	+
Alt ve Üst Adaptörü: Pik Döküm (EN-GJL-250)	*Lower and Upper Interconnector: Cast Iron (EN-GJL-250)*	+	+	+	+	+	+
Mekanik Keçe Dolayısıyla Bakım Gerektirmez	*No requirement of maintenance due to mechanical seal*	+	+	+	+	+	+

Pompa Kodlaması

Identification Code

Pompa Modeli	*Pump Type*
Motor Gücü (HP)	*Motor Power (HP)*
Kademe Sayısı	*Stage Number*
Faz M= Monofaze T= Trifaze	*Phase M= Monophase* *T= Threephase*

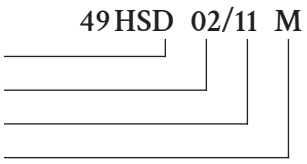

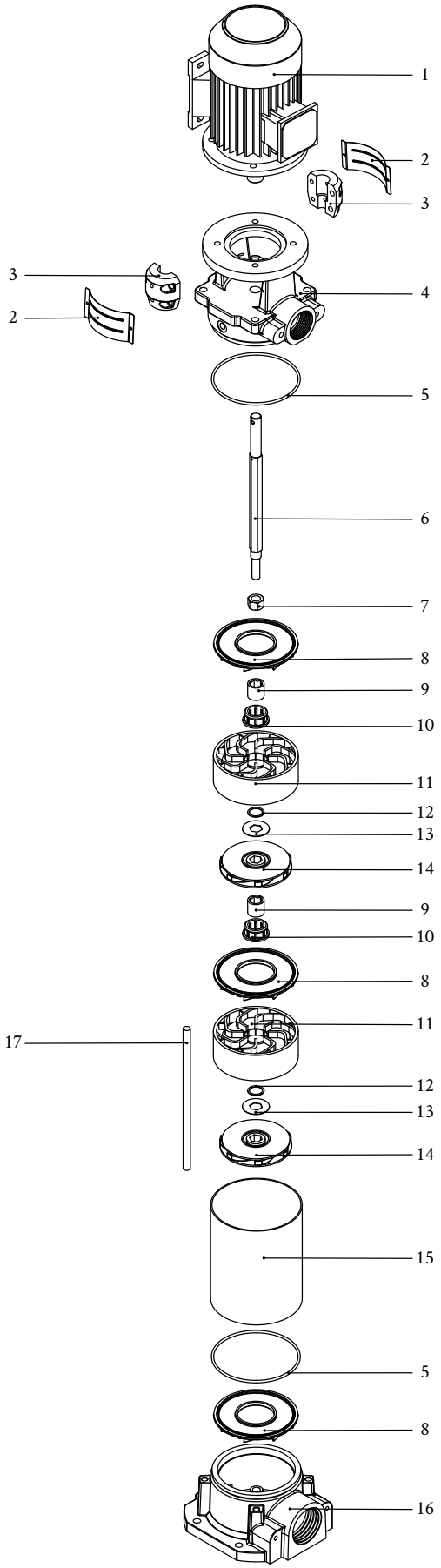

No	Ürün	Malzeme
1	Motor	-
2	Kaplin Koruma Kapağı	Paslanmaz Çelik (AISI 304)
3	Kaplin	Döküm (EN-GJL-250)
4	Motor Bağlantı Parçası	Döküm (EN-GJL-250)
5	Dış Kılıf Contası	Kauçuk (NBR)
6	Mil	Paslanmaz Çelik (AISI 304)
7	Kilitleme Somunu	Paslanmaz Çelik (AISI 304)
8	Kademe Kapağı	Noril
9	Kademe Burcu	Paslanmaz Çelik (AISI 304)
10	Kademe Lastiği	Kauçuk (NBR)
11	Kademe	Noril
12	Ayar Sacı	Paslanmaz Çelik (AISI 304)
13	Pul	Paslanmaz Çelik (AISI 304)
14	Fan	Noril
15	Dış Kılıf Borusu	Paslanmaz Çelik (AISI 304)
16	Emiş Haznesi	Döküm (EN-GJL-250)
17	Gerdirme Saplaması	Paslanmaz Çelik (CK 45)

No	Components	Material
1	Motor	-
2	Coupling Guard	Stainless Steel (AISI 304)
3	Coupling	Cast Iron (EN-GJL-250)
4	Pump Head	Cast Iron (EN-GJL-250)
5	0-Ring	Rubber (NBR)
6	Shaft	Stainless Steel (AISI 304)
7	Lock washer	Stainless Steel (AISI 304)
8	Stage Cover	Noryl
9	Bearing Ring	Stainless Steel (AISI 304)
10	Neck Ring	Rubber (NBR)
11	Stage	Noryl
12	Shim	Stainless Steel (AISI 304)
13	Spacer	Stainless Steel (AISI 304)
14	Impeller	Noryl
15	Outer Sleeve	Stainless Steel (AISI 304)
16	Suction Base	Cast Iron (EN-GJL-250)
17	Staybolt	Stainless Steel (CK 45)

49HSD MONOBLOK HİDROFOR / *MONOBLOCK VMS PUMP*

Hidrofor Tipi *VMS Pump*	HP	kW	Kademe *Stage*	Emiş Ağızı *Suction Entrance*	Çıkış Ağızı *Outlet Entrance*	Boy / *Length (mm)* A Monofaze *Monophase*	Boy / *Length (mm)* A Trifaze *Threephase*	Boy / *Length (mm)* B Trifaze *Threephase*	Ağırlık *Weight (kg)* Monofaze *Monophase*	Ağırlık *Weight (kg)* Trifaze *Threephase*
49HSD 01/06	1	0,75	6	1 1/4"	1 1/4"	705	690	430	18	16
49HSD 1,5/09	1,5	1,1	9	1 1/4"	1 1/4"	820	820	550	21	20,5
49HSD 02/11	2	1,5	11	1 1/4"	1 1/4"	900	900	630	24	23,5
49HSD 03/15	3	2,2	15	1 1/4"	1 1/4"	-	1095	821	-	25,5
49HSD 03/18	3	2,2	18	1 1/4"	1 1/4"	-	1245	965	-	27

49HSD TEKLİ / İKİLİ / ÜÇLÜ HİDROFOR / *SINGLE / DOUBLE / TRIPLE VMS PUMP*

Hidrofor Tipi *VMS Pump*	Ölçüler / *Dimensions (mm)* Yükseklik / *Height* H	H1	H2	Tekli / *Single* B	B1	B2	İkili / *Double* B	B1	B2	Üçlü / *Triple* B	B1	B2	Ağırlık / *Weight (kg)* Tekli *Single*	İkili *Double*	Üçlü *Triple*
49HSD 01/06	785	405	105	300	300	510	600	300	750	600	300	750	25	63	94
49HSD 1,5/09	875	535	105	300	300	510	600	300	750	600	300	750	29	67	102
49HSD 02/11	965	635	105	300	300	510	600	300	750	600	300	750	40	73	113
49HSD 03/15	1155	810	105	300	300	510	600	300	750	600	300	750	42,5	77	118
49HSD 03/18	1300	940	105	300	300	510	600	300	750	600	300	750	45	80	123

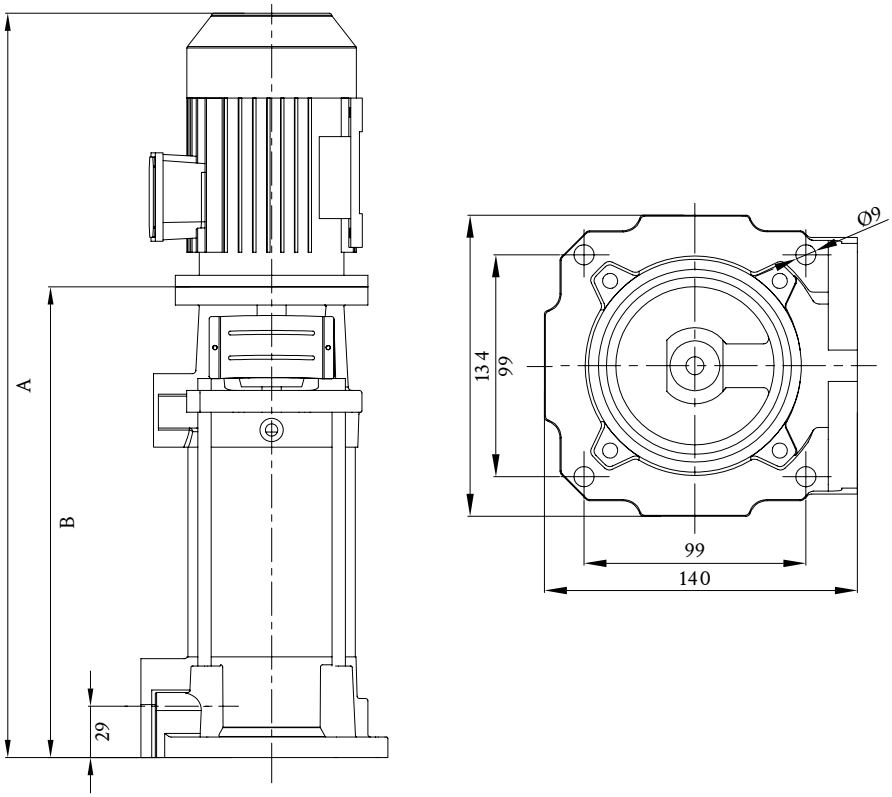

55HSE MONOBLOK HİDROFOR / *MONOBLOCK VMS PUMP*

Hidrofor Tipi *VMS Pump*	HP	kW	Kademe *Stage*	Emiş Ağızı *Suction Entrance*	Çıkış Ağızı *Outlet Entrance*	Boy / *Length (mm)* A Monofaze *Monophase*	Boy / *Length (mm)* A Trifaze *Threephase*	Boy / *Length (mm)* B Trifaze *Threephase*	Ağırlık *Weight (kg)* Monofaze *Monophase*	Ağırlık *Weight (kg)* Trifaze *Threephase*
55HSE 01/05	1	0,75	5	1 1/4"	1"	600	600	360	20,5	20
55HSE 01/06	1	0,75	6	1 1/4"	1"	620	620	380	21,5	21
55HSE 1,5/07	1,5	1,1	7	1 1/4"	1"	640	640	400	22,5	22
55HSE 1,5/08	1,5	1,1	8	1 1/4"	1"	660	660	420	23,5	23
55HSE 1,5/09	1,5	1,1	9	1 1/4"	1"	680	680	440	24,5	24
55HSE 02/10	2	1,5	10	1 1/4"	1"	700	700	460	26	25
55HSE 02/11	2	1,5	11	1 1/4"	1"	720	720	480	27	26
55HSE 02/12	2	1,5	12	1 1/4"	1"	740	740	500	28	27

55HSE TEKLİ / İKİLİ / ÜÇLÜ HİDROFOR / *SINGLE / DOUBLE / TRIPLE VMS PUMP*

Hidrofor Tipi *VMS Pump*	Ölçüler / *Dimensions (mm)* Yükseklik / *Height* H	H1	H2	Tekli / *Single* B	B1	B2	İkili / *Double* B	B1	B2	Üçlü / *Triple* B	B1	B2	Ağırlık / *Weight (kg)* Tekli *Single*	İkili *Double*	Üçlü *Triple*
55HSE 01/05	670	320	115	300	300	510	600	300	510	900	300	1050	35	65	100
55HSE 01/06	690	340	115	300	300	510	600	300	510	900	300	1050	36	66	103
55HSE 1,5/07	710	360	115	300	300	510	600	300	510	900	300	1050	37	67	106
55HSE 1,5/08	730	380	115	300	300	510	600	300	510	900	300	1050	38	68	109
55HSE 1,5/09	750	400	115	300	300	510	600	300	510	900	300	1050	39	69	112
55HSE 02/10	770	420	115	300	300	510	600	300	510	900	300	1050	40	70	115
55HSE 02/11	790	440	115	300	300	510	600	300	510	900	300	1050	41	71	118
55HSE 02/12	810	460	115	300	300	510	600	300	510	900	300	1050	42	72	121

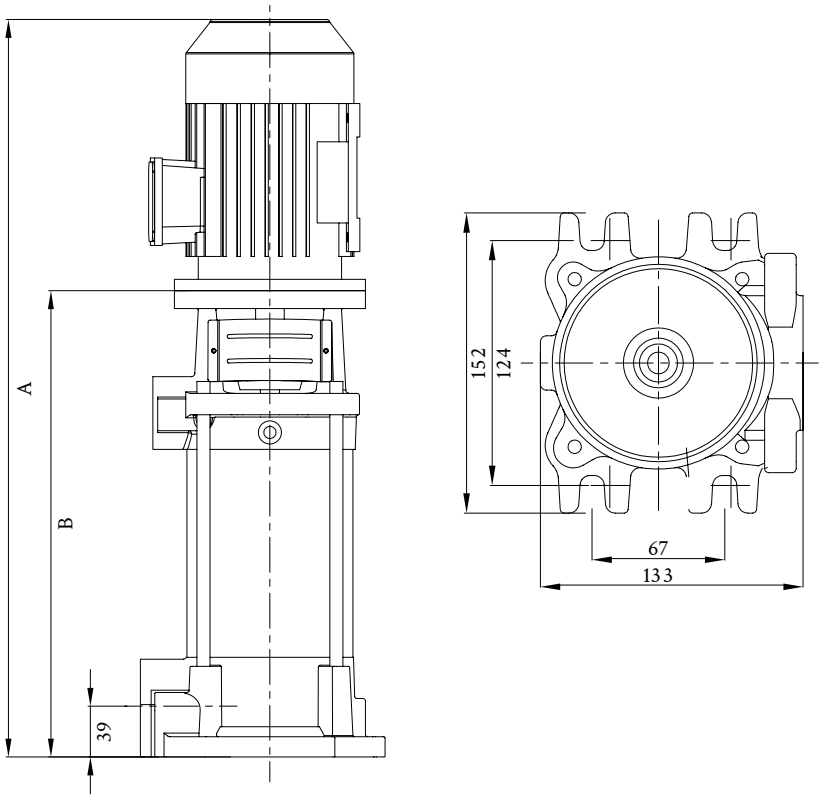

59HSF MONOBLOK HİDROFOR / *MONOBLOCK VMS PUMP*

Hidrofor Tipi *VMS Pump*	HP	kW	Kademe *Stage*	Emiş Ağızı *Suction Entrance*	Çıkış Ağızı *Outlet Entrance*	Boy / *Length (mm)* A Monofaze *Monophase*	Boy / *Length (mm)* A Trifaze *Threephase*	Boy / *Length (mm)* B Trifaze *Threephase*	Ağırlık *Weight (kg)* Monofaze *Monophase*	Ağırlık *Weight (kg)* Trifaze *Threephase*
59HSF 1,5/04	1,5	1,1	4	1 1/2"	1 1/4"	623	625	365	25,5	25
59HSF 02/05	2	1,5	5	1 1/2"	1 1/4"	648	650	390	28	27
59HSF 03/06	3	2,2	6	1 1/2"	1 1/4"	-	695	415	-	30
59HSF 03/07	3	2,2	7	1 1/2"	1 1/4"	-	720	440	-	31
59HSF 04/08	4	3	8	1 1/2"	1 1/4"	-	755	465	-	35
59HSF 04/09	4	3	9	1 1/2"	1 1/4"	-	780	490	-	36
59HSF 04/10	4	3	10	1 1/2"	1 1/4"	-	805	515	-	37

59HSF TEKLİ / İKİLİ / ÜÇLÜ HİDROFOR / *SINGLE / DOUBLE / TRIPLE VMS PUMP*

Hidrofor Tipi *VMS Pump*	Ölçüler / *Dimensions (mm)* Yükseklik / *Height* H	H1	H2	Tekli / *Single* B	B1	B2	İkili / *Double* B	B1	B2	Üçlü / *Triple* B	B1	B2	Ağırlık / *Weight (kg)* Tekli *Single*	İkili *Double*	Üçlü *Triple*
59HSF 1,5/04	670	350	105	300	360	500	600	360	500	900	360	1100	40	65	90
59HSF 02/05	700	375	105	300	360	500	600	360	500	900	360	1100	42	69	96
59HSF 03/06	760	400	105	300	360	500	600	360	500	900	360	1100	45	75	105
59HSF 03/07	785	425	105	300	360	500	600	360	500	900	360	1100	46	77	108
59HSF 04/08	820	450	105	300	360	500	600	360	500	900	360	1100	50	85	120
59HSF 04/09	845	475	105	300	360	500	600	360	500	900	360	1100	41	87	123
59HSF 04/10	870	500	105	300	360	500	600	360	500	900	360	1100	42	89	126

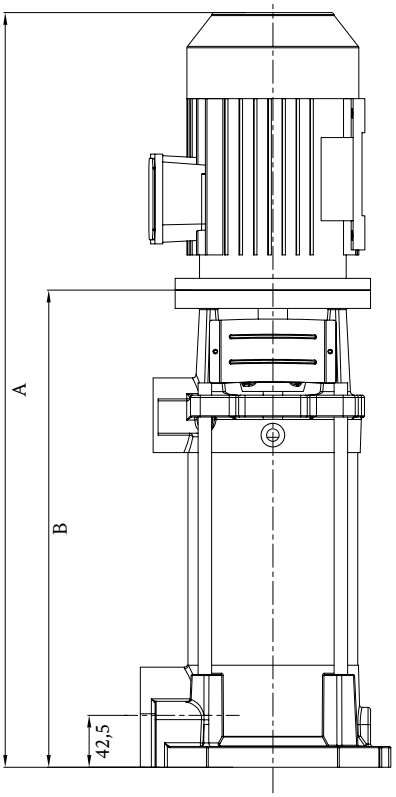

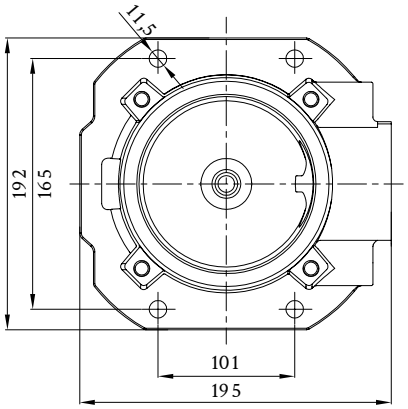

618HSL MONOBLOK HİDROFOR / *MONOBLOCK VMS PUMP*

Hidrofor Tipi *VMS Pump*	HP	kW	Kademe *Stage*	Emiş Ağızı *Suction Entrance*	Çıkış Ağızı *Outlet Entrance*	Boy / *Length (mm)* A Monofaze *Monophase*	Boy / *Length (mm)* A Trifaze *Threephase*	Boy / *Length (mm)* B Trifaze *Threephase*	Ağırlık *Weight (kg)* Monofaze *Monophase*	Ağırlık *Weight (kg)* Trifaze *Threephase*
618HSL 02/03	2	1,5	3	2 "	1 1/2"	949	650	380	27,5	27
618HSL 02/04	2	1,5	4	2 "	1 1/2"	709	710	440	31	30
618HSL 03/05	3	2,2	5	2 "	1 1/2"	-	750	490	-	32
618HSL 03/06	3	2,2	6	2 "	1 1/2"	-	800	540	-	35
618HSL 04/07	4	3	7	2 "	1 1/2"	-	850	590	-	37
618HSL 05/08	5,5	4	8	2 "	1 1/2"	-	920	640	-	44
618HSL 07/10	7,5	5,5	10	2 "	1 1/2"	-	1098	740	-	48
618HSL 07/11	7,5	5,5	11	2 "	1 1/2"	-	1120	790	-	50
618HSL 10/13	10	7,5	13	2 "	1 1/2"	-	1186	890	-	59
618HSL 10/15	10	7,5	15	2 "	1 1/2"	-	1230	990	-	68

618HSL TEKLİ / İKİLİ / ÜÇLÜ HİDROFOR / *SINGLE / DOUBLE / TRIPLE VMS PUMP*

Hidrofor Tipi *VMS Pump*	Ölçüler / *Dimensions (mm)* Yükseklik / *Height* H	H1	H2	Tekli / *Single* B	B1	B2	İkili / *Double* B	B1	B2	Üçlü / *Triple* B	B1	B2	Ağırlık / *Weight (kg)* Tekli *Single*	İkili *Double*	Üçlü *Triple*
618HSL 02/03	705	350	105	300	360	500	600	360	500	900	360	1100	42	79	121
618HSL 02/04	755	400	105	300	360	500	600	360	500	900	360	1100	44	83	130
618HSL 03/05	815	450	105	300	360	500	600	360	500	900	360	1100	47	89	136
618HSL 03/06	865	500	105	300	360	500	600	360	500	900	360	1100	49	93	142
618HSL 04/07	915	550	105	300	360	500	600	360	500	900	360	1100	52	99	151
618HSL 05/08	995	600	105	300	360	500	600	360	500	900	360	1100	59	113	172
618HSL 07/10	1120	700	105	300	360	500	600	360	500	900	360	1100	63	121	184
618HSL 07/11	1185	750	105	300	360	500	600	360	500	900	360	1100	65	125	190
618HSL 10/13	1315	850	105	300	360	500	600	360	500	900	360	1100	70	133	203
618HSL 10/15	1445	950	105	300	360	500	600	360	500	900	360	1100	75	140	215

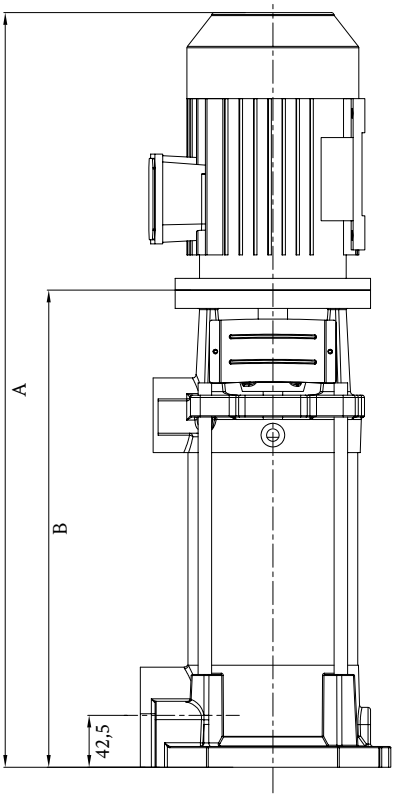

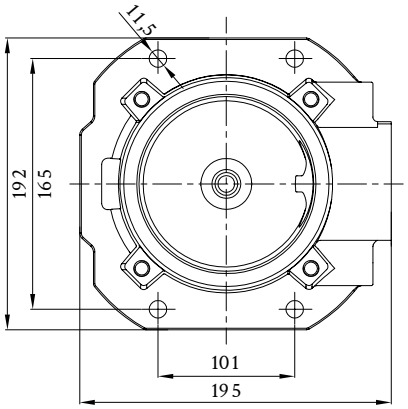

624HSM MONOBLOK HİDROFOR / *MONOBLOCK VMS PUMP*

Hidrofor Tipi *VMS Pump*	HP	kW	Kademe *Stage*	Emiş Ağızı *Suction Entrance*	Çıkış Ağızı *Outlet Entrance*	Boy / *Length (mm)* A Monofaze *Monophase*	Boy / *Length (mm)* A Trifaze *Threephase*	Boy / *Length (mm)* B Trifaze *Threephase*	Ağırlık *Weight (kg)* Monofaze *Monophase*	Ağırlık *Weight (kg)* Trifaze *Threephase*
624HSM 03/04	3	2,2	4	2 "	1 1/2"	-	649	440	-	37
624HSM 04/05	4	3	5	2 "	1 1/2"	-	650	490	-	38
624HSM 05/06	5,5	4	6	2 "	1 1/2"	-	710	540	-	41,5
624HSM 05/07	5,5	4	7	2 "	1 1/2"	-	867	592	-	44
624HSM 07/09	7,5	5,5	9	2 "	1 1/2"	-	900	695	-	47,5
624HSM 07/10	7,5	5,5	10	2 "	1 1/2"	-	916	747	-	49
624HSM 10/12	10	7,5	12	2 "	1 1/2"	-	950	850	-	54,5
624HSM 10/13	10	7,5	13	2 "	1 1/2"	-	967	902	-	57

624HSM TEKLİ / İKİLİ / ÜÇLÜ HİDROFOR / *SINGLE / DOUBLE / TRIPLE VMS PUMP*

Hidrofor Tipi *VMS Pump*	Ölçüler / *Dimensions (mm)* Yükseklik / *Height* H	H1	H2	Tekli / *Single* B	B1	B2	İkili / *Double* B	B1	B2	Üçlü / *Triple* B	B1	B2	Ağırlık / *Weight (kg)* Tekli *Single*	İkili *Double*	Üçlü *Triple*
624HSM 03/04	755	400	105	300	360	500	600	360	800	900	360	1100	44	83	151
624HSM 04/05	815	450	105	300	360	500	600	360	800	900	360	1100	47	89	155
624HSM 05/06	845	500	105	300	360	500	600	360	800	900	360	1100	49	93	166
624HSM 05/07	910	550	105	300	360	500	600	360	800	900	360	1100	56	101	170
624HSM 07/09	1045	650	105	300	360	500	600	360	800	900	360	1100	63	117	184
624HSM 07/10	1175	700	105	300	360	500	600	360	800	900	360	1100	70	133	217
624HSM 10/12	1245	800	105	300	360	500	600	360	800	900	360	1100	84	165	249
624HSM 10/13	1310	850	105	300	360	500	600	360	800	900	360	1100	91	181	265

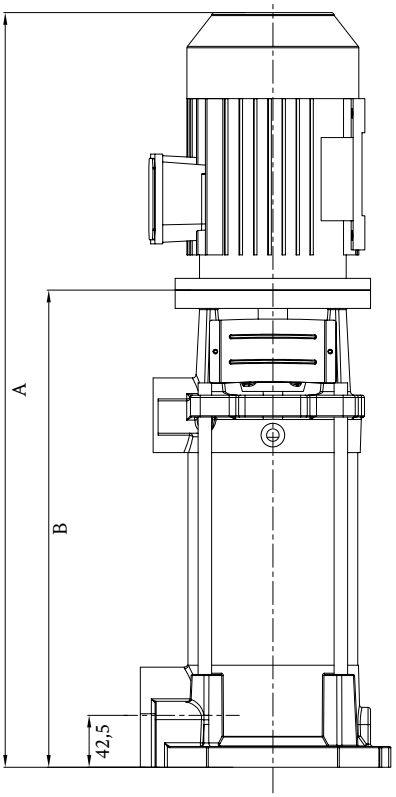

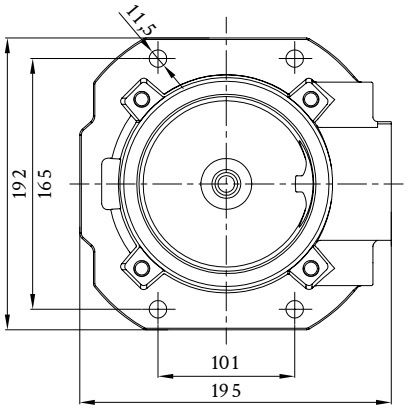

636HSH MONOBLOK HİDROFOR / *MONOBLOCK VMS PUMP*

Hidrofor Tipi *VMS Pump*	HP	kW	Kademe *Stage*	Emiş Ağızı *Suction Entrance*	Çıkış Ağızı *Outlet Entrance*	Boy / *Length (mm)* A Monofaze *Monophase*	Boy / *Length (mm)* A Trifaze *Threephase*	Boy / *Length (mm)* B Trifaze *Threephase*	Ağırlık *Weight (kg)* Monofaze *Monophase*	Ağırlık *Weight (kg)* Trifaze *Threephase*
636HSH 03/01-IN	3	2,2	1	2 "	2 "	-	820	610	-	65
636HSH 04/02-IN	4	3	2	2 "	2 "	-	895	645	-	68
636HSH 05/03-IN	5,5	4	3	2 "	2 "	-	970	680	-	70
636HSH 07/05-IN	7,5	5,5	5	2 "	2 "	-	1120	750	-	75
636HSH 10/06-IN	10	7,5	6	2 "	2 "	-	1230	830	-	80
636HSH 15/07-IN	15	11	7	2 "	2 "	-	1330	910	-	101
636HSH 15/09-IN	15	11	9	2 "	2 "	-	1430	1070	-	128
636HSH 20/12-IN	20	15	12	2 "	2 "	-	1580	1310	-	147

636HSH TEKLİ / İKİLİ / ÜÇLÜ HİDROFOR / *SINGLE / DOUBLE / TRIPLE VMS PUMP*

Hidrofor Tipi *VMS Pump*	Ölçüler / *Dimensions (mm)* Yükseklik / *Height* H	H1	H2	Tekli / *Single* B	B1	B2	İkili / *Double* B	B1	B2	Üçlü / *Triple* B	B1	B2	Ağırlık / *Weight (kg)* Tekli *Single*	İkili *Double*	Üçlü *Triple*
636HSH 03/01-IN	850	530	160	400	370	550	400	370	550	1200	370	1350	80	160	240
636HSH 04/02-IN	925	595	160	400	370	550	400	370	550	1200	370	1350	82	165	246
636HSH 05/03-IN	1000	660	160	400	370	550	400	370	550	1200	370	1350	85	170	255
636HSH 07/05-IN	1150	790	160	400	370	550	400	370	550	1200	370	1350	90	180	270
636HSH 10/06-IN	1230	860	160	400	370	550	400	370	550	1200	370	1350	95	190	285
636HSH 15/07-IN	1305	960	160	400	370	550	400	370	550	1200	370	1350	116	230	348
636HSH 15/09-IN	1520	1160	160	400	370	550	400	370	550	1200	370	1350	143	286	429
636HSH 20/12-IN	-	-	160	400	370	550	400	370	550	1200	370	1350	182	362	546

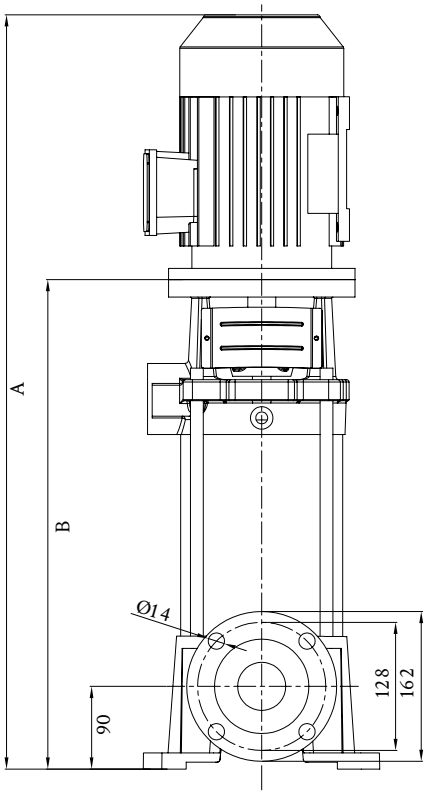

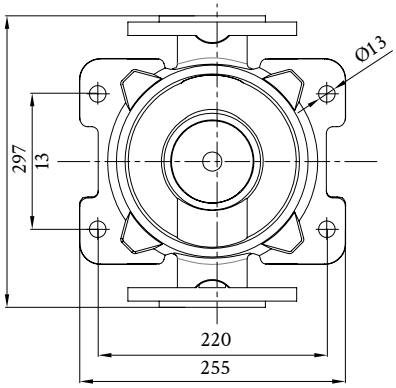

Emiş - Çıkış / Suction - Outlet Tekli / Single: 1 1/4" - 1 1/4" İkili / Double: 2" - 2" Üçlü / Triple: 2" - 2"

Hidrofor Tipi *VMS Pump*	Kademe Sayısı *Stage No.*	HP	kW	V	Basma Yüksekliği / *Head (m)*						
					I 0 (m³/h)	2	3	4	5	6	7
					II 0 (m³/h)	4	6	8	10	12	14
					III 0 (m³/h)	6	9	12	15	18	21
49HSD 01/06-M	6	1	0,75	220	46	40	38	36	30	24	18
49HSD 1,5/09-M	9	1,5	1,1	220	63	55	52	44	40	30	22
49HSD 02/11-M	11	2	1,5	220	74	70	65	60	54	48	38
49HSD 01/06-T	6	1	0,75	380	46	40	38	36	30	24	18
49HSD 1,5/09-T	9	1,5	1,1	380	63	55	52	44	40	30	22
49HSD 02/11-T	11	2	1,5	380	74	70	65	60	54	48	38
49HSD 03/18-T	18	3	2,2	380	117	110	108	96	84	70	50

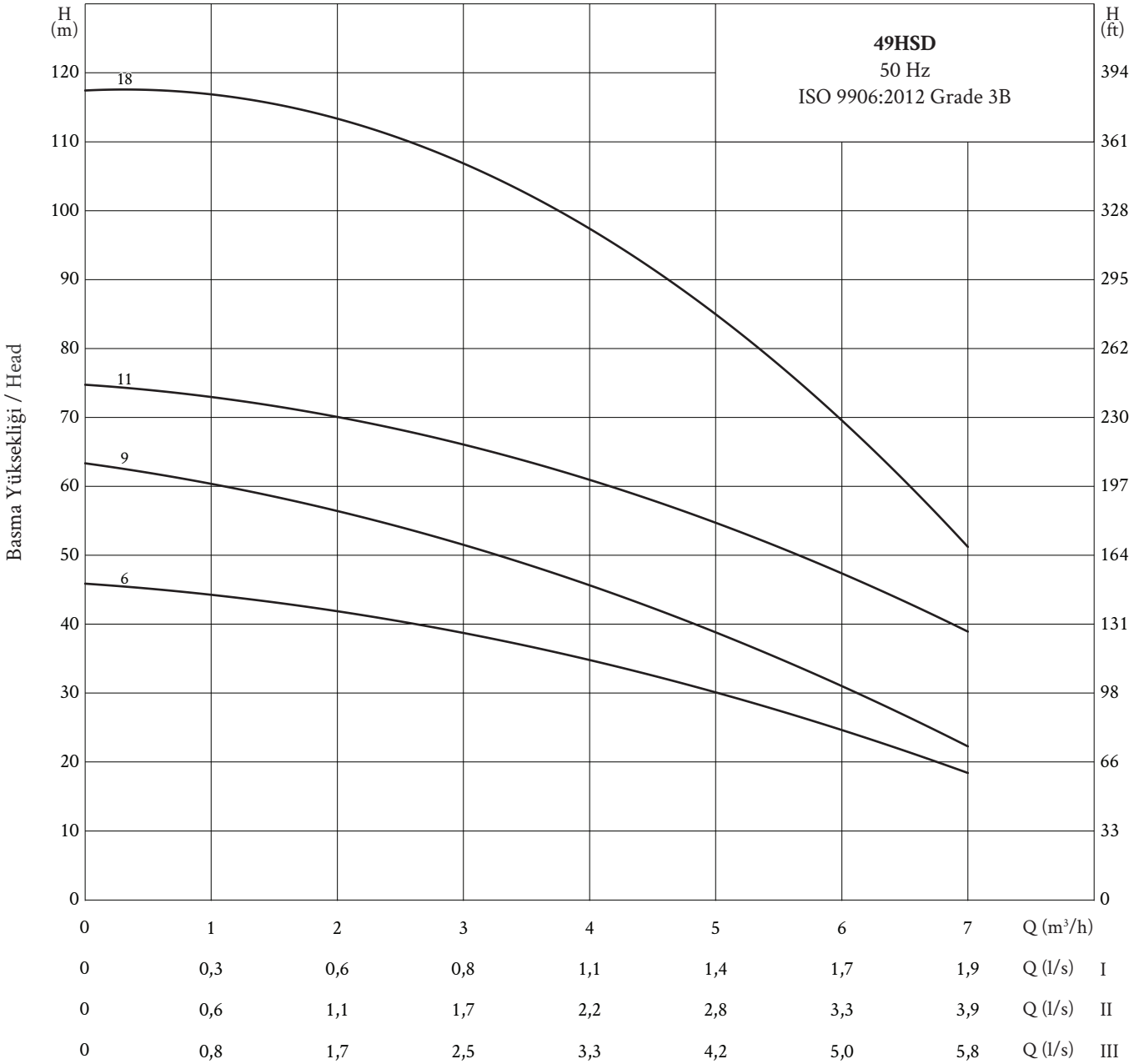

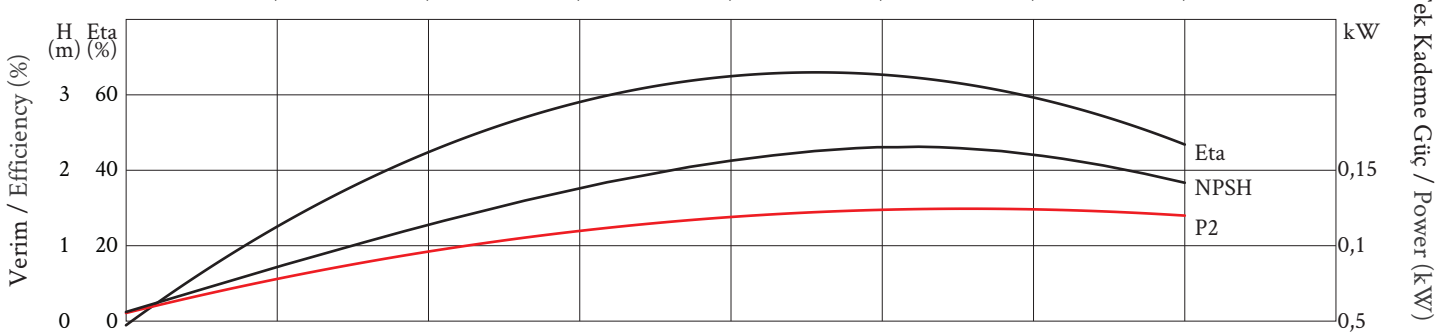

Emiş - Çıkış / Suction - Outlet Tekli / Single: 1 1/4" - 1 İkili / Double: 2" - 1 1/2" Üçlü / Triple: 2" - 1 1/2"

Hidrofor Tipi *VMS Pump*	Kademe Sayısı *Stage No.*	HP	kW	V	Basma Yüksekliği / *Head (m)*				
					I 0 (m³/h)	1	2	3	4
					II 0 (m³/h)	2	4	6	8
					III 0 (m³/h)	3	6	9	12
55HSE01/05-M	5	1	0,75	220	45	44	40	36	29
55HSE01/06-M	6	1	0,75	220	54	52	48	43	34
55HSE1,5/07-M	7	1,5	1,1	220	63	61	58	52	40
55HSE1,5/08-M	8	1,5	1,1	220	72	70	65	59	45
55HSE1,5/09-M	9	1,5	1,1	220	81	78	73	65	50
55HSE01/05-T	5	1	0,75	380	45	44	40	36	29
55HSE01/06-T	6	1	0,75	380	54	52	48	43	34
55HSE1,5/07-T	7	1,5	1,1	380	63	61	58	52	40
55HSE1,5/08-T	8	1,5	1,1	380	72	70	65	59	45
55HSE1,5/09-T	9	1,5	1,1	380	81	78	73	65	50
55HSE02/10-T	10	2	1,5	380	91	88	82	75	59
55HSE02/11-T	11	2	1,5	380	100	95	90	80	63
55HSE02/12-T	12	2	1,5	380	109	105	98	88	69

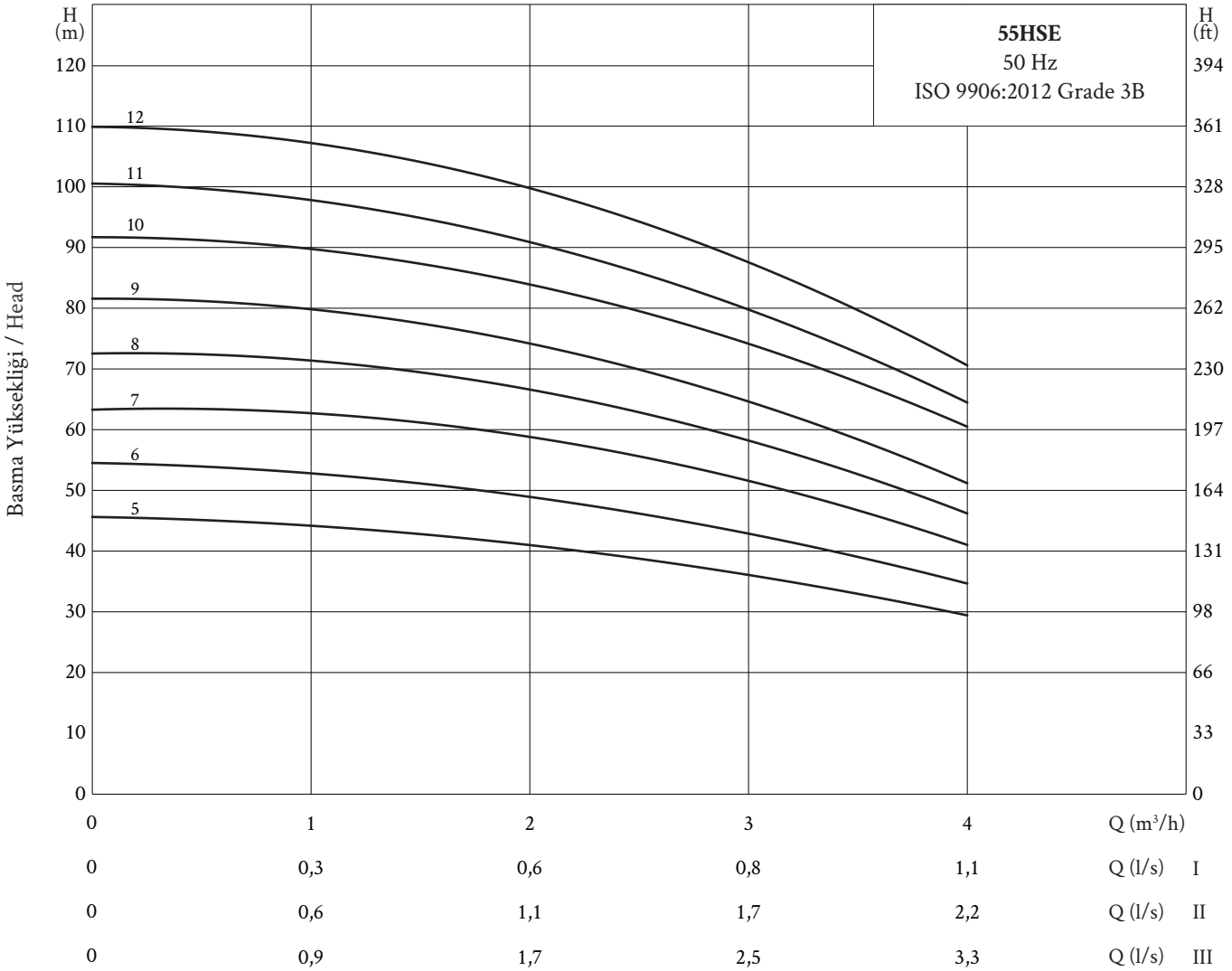

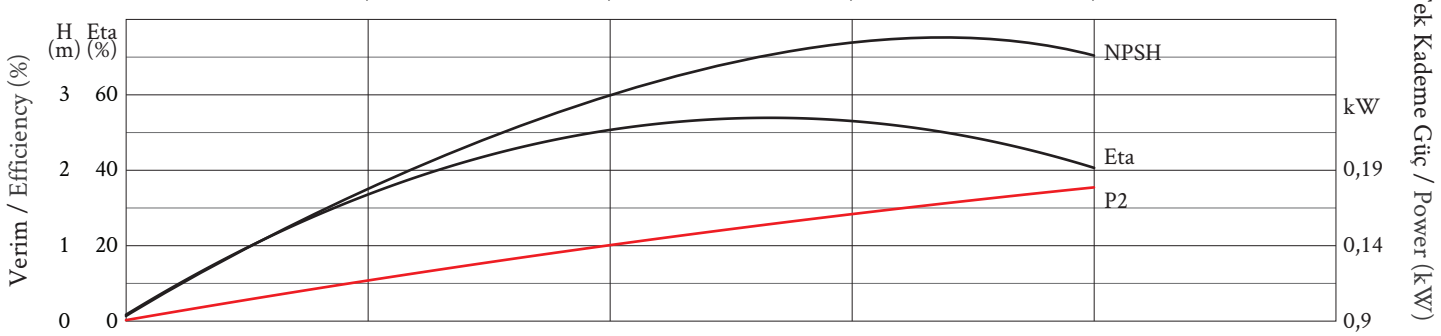

Emiş - Çıkış / Suction - Outlet Tekli / Single: 1 1/2" - 1 1/4" İkili / Double: 2" - 2" Üçlü / Triple: 2" - 2"

Hidrofor Tipi *VMS Pump*	Kademe Sayısı *Stage No.*	HP	kW	V	Basma Yüksekliği / *Head (m)*						
					I 0 (m³/h)	4	5	6	7	8	9
					II 0 (m³/h)	8	10	12	14	16	18
					III 0 (m³/h)	12	15	18	21	24	27
59HSF 1,5/04-M	4	1,5	1,1	220	56	44	38	32	26	19	11
59HSF 02/05-M	5	2	1,5	220	66	52	47	40	33	24	15
59HSF 1,5/04-T	4	1,5	1,1	380	56	44	38	32	26	19	11
59HSF 02/05-T	5	2	1,5	380	66	52	47	40	33	24	15
59HSF 03/06-T	6	3	2,2	380	75	62	56	50	41	31	20
59HSF 03/07-T	7	3	2,2	380	84	72	66	58	50	38	26
59HSF 04/08-T	8	4	3	380	96	82	76	68	58	45	30
59HSF 04/09-T	9	4	3	380	108	92	86	76	66	51	35
59HSF 04/10-T	10	4	3	380	120	104	98	88	77	62	43

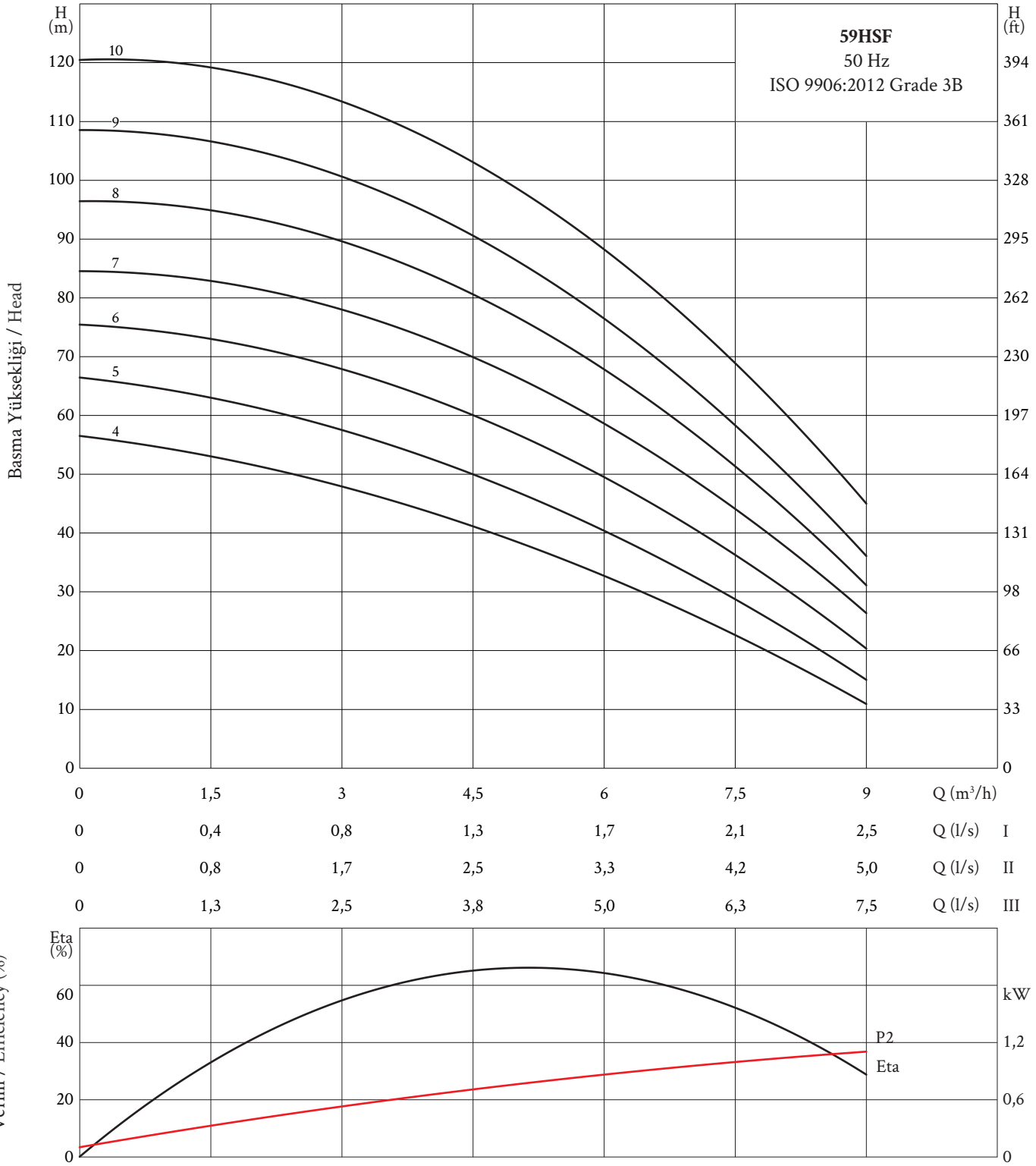

Emiş - Çıkış / Suction - Outlet Tekli / Single: 2" - 1 1/2" İkili / Double: 2 1/2" - 2" Üçlü / Triple: 2 1/2" - 2"

Hidrofor Tipi *VMS Pump*	Kademe Sayısı *Stage No.*	HP	kW	V	Basma Yüksekliği / *Head (m)*				
					I 0 (m³/h)	4	8	12	16
					II 0 (m³/h)	8	16	24	32
					III 0 (m³/h)	12	24	36	48
618HSL 02/03	3	2	1,5	380	43	41	36	25	8
618HSL 02/04	4	2	1,5	380	53	45	41	27	10
618HSL 03/05	5	3	2,2	380	65	59	52	36	12
618HSL 03/06	6	3	2,2	380	75	64	59	42	15
618HSL 04/07	7	4	3	380	100	89	75	52	21
618HSL 05/08	8	5,5	4	380	115	111	95	68	31
618HSL 07/10	10	7,5	5,5	380	128	122	105	81	37
618HSL 07/11	11	7,5	5,5	380	141	134	115	89	41
618HSL 10/13	13	10	7,5	380	167	158	136	105	49
618HSL 10/15	15	10	7,5	380	181	177	160	118	57

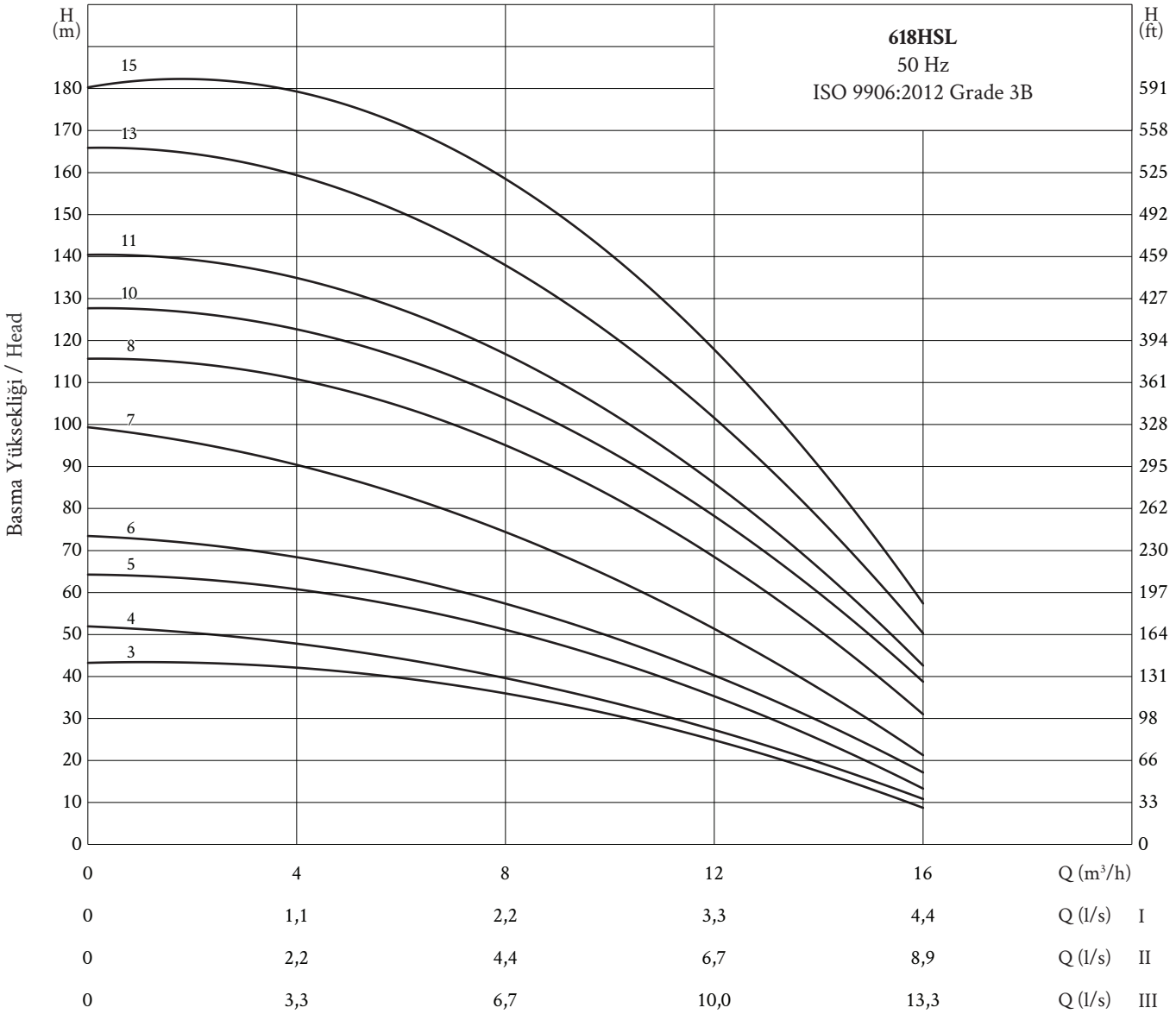

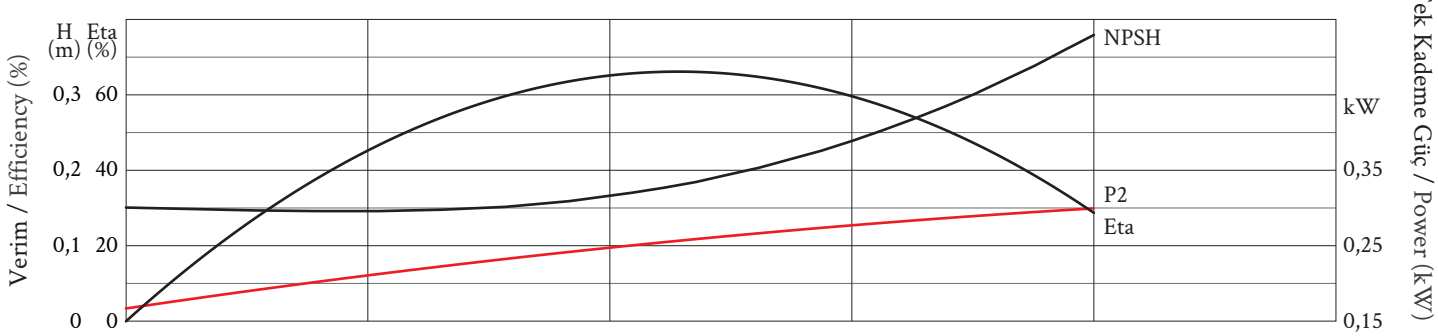

Emiş - Çıkış / Suction - Outlet Tekli / Single: 2" - 1 1/2" İkili / Double: 2 1/2" - 2" Üçlü / Triple: 2 1/2" - 2"

Hidrofor Tipi *VMS Pump*	Kademe Sayısı *Stage No.*	HP	kW	V	Basma Yüksekliği / *Head (m)*						
					I 0 (m³/h)	8	12	16	18	20	22
					II 0 (m³/h)	16	24	32	36	40	44
					III 0 (m³/h)	24	36	48	54	60	66
624HSM 03/04	4	3	2,2	380	49	42	38	31	26	19	11
624HSM 04/05	5	4	3	380	61	53	48	39	33	23	13
624HSM 05/06	6	5,5	4	380	73	64	58	47	40	27	16
624HSM 05/07	7	5,5	4	380	85	74	67	55	46	32	18
624HSM 07/09	9	7,5	5,5	380	110	95	86	70	59	41	23
624HSM 07/10	10	7,5	5,5	380	122	106	96	78	66	46	26
624HSM 10/12	12	10	7,5	380	146	127	115	94	79	55	31
624HSM 10/13	13	10	7,5	380	159	138	125	101	86	60	34

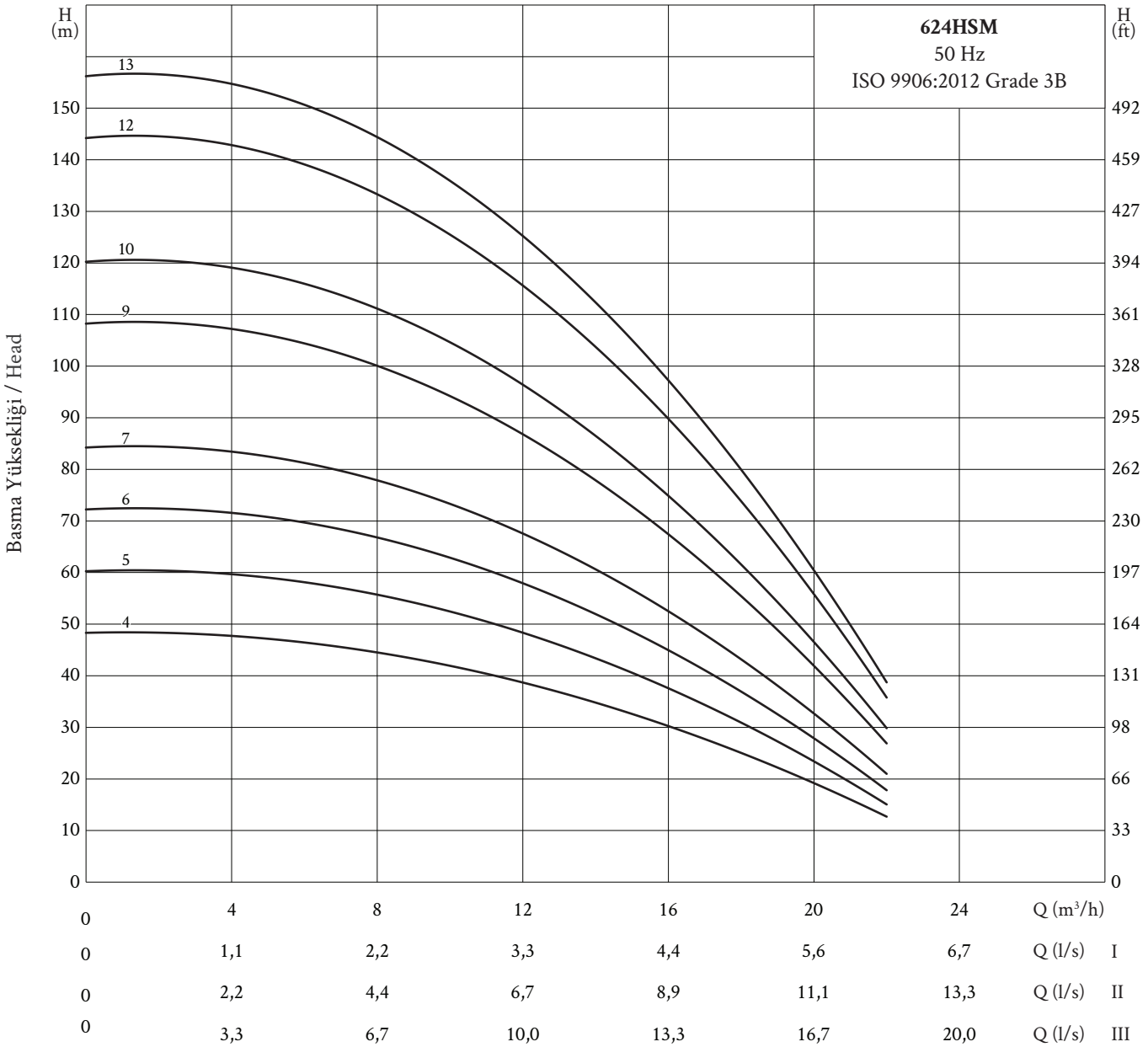

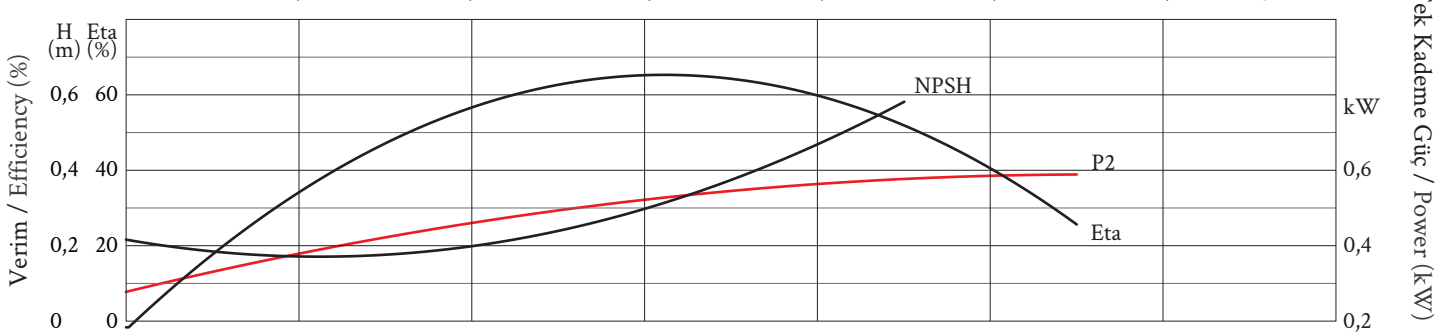

Emiş - Çıkış / Suction - Outlet Tekli / Single: 2 1/2" - 2 1/2" İkili / Double: 3" - 3" Üçlü / Triple: 3" - 3"

Hidrofor Tipi *VMS Pump*	Kademe Sayısı *Stage No.*	HP	kW	V	Basma Yüksekliği / *Head (m)*						
					I 0 (m³/h)	10	15	20	25	30	35
					II 0 (m³/h)	20	30	40	50	60	70
					III 0 (m³/h)	30	45	60	75	90	105
636HSH 03/01-IN	1	2,2	3	380	15	14	13	11	10	8	5
636HSH 04/02-IN	2	3	4	380	30	27	25	22	20	16	9
636HSH 05/03-IN	3	4	5,5	380	45	41	38	35	31	24	14
636HSH 07/05-IN	5	5,5	7,5	380	75	68	63	55	50	40	23
636HSH 10/06-IN	6	7,5	10	380	90	82	76	66	60	48	28
636HSH 15/07-IN	7	11	15	380	105	96	89	77	70	56	33
636HSH 15/09-IN	9	11	15	380	135	123	114	99	90	72	42
636HSH 20/12-IN	12	15	20	380	180	164	152	132	120	96	56

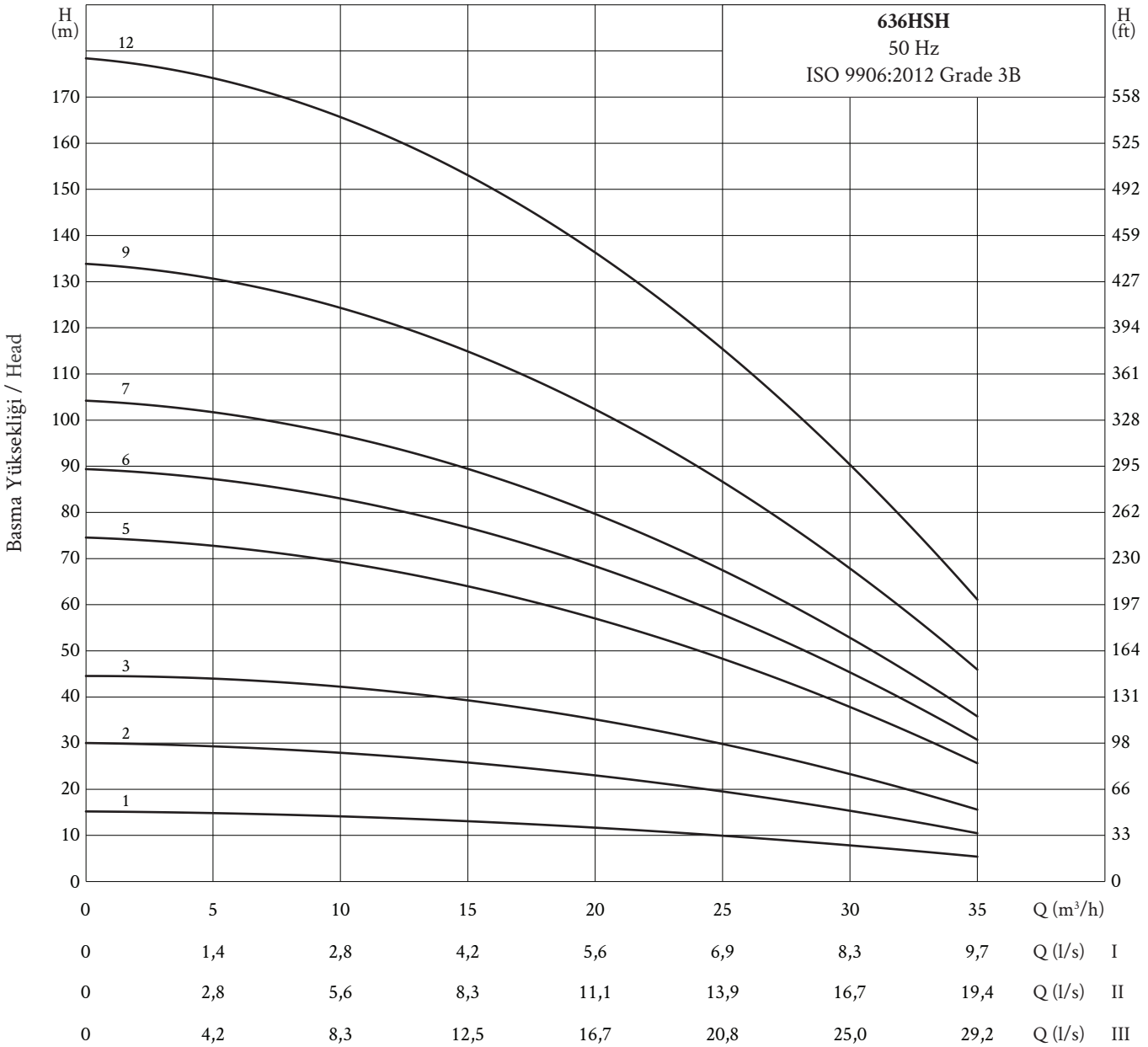

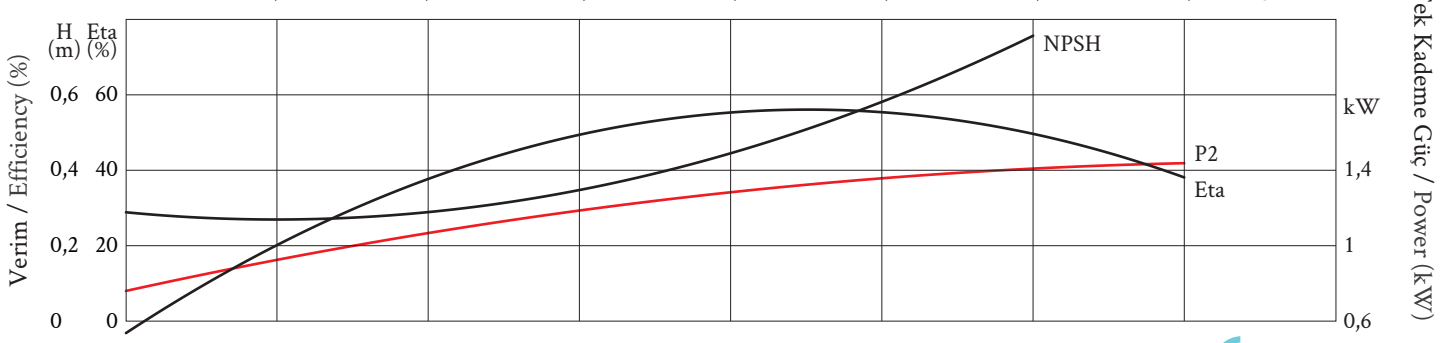

ÜSTÜNEL
Dalgıç Pompa-Submersible Pump

IN-LINE PASLANMAZ HİDROFOR POMPA

IN-LINE STAINLESS STEEL VERTICAL MULTISTAGE (VMS) PUMPS

Kullanım Yerleri

Su temini ve proses suyu transferi
Yüksek basınçlı tıkama ve prosesler
Yangın söndürme sistemleri
Şebeke suyunun olmadığı yerleşim yerleri
Park, bahçe ve çiftlikler
Küçük su ikmal istasyonları
Şebeke suyunun basıncının yetmediği; çok katlı binalar, otel, hastane, okul, iş yerleri, siteler, sanayi

Applications

Water supply and process water transfer
High pressure blocking and processes
Fire fighting systems
Residential units without water mains
Parks, gardens and farms
Small water supply stations
Buildings where water pressure is not enough: hotel, hospital, school, work sites, sites, industrial places

Çalışma Koşulları

Maksimum Sıvı Sıcaklığı		35°C
Maksimum Kum Miktarı		25 gr/m³
Motor Koruma Sınıfı		IP68
Maksimum Çalışma Sesi		70dB
Maksimum Kalkış Sayısı		20 (kalkış/saat)
Maksimum Çalışma Basıncı		25 bar
Motor Gücü:	Monofaze	0,37-2,2 kW
	Trifaze	2,2-55kW
Sıvı Sıcaklığı		-20°C - +120°C
Motor Dönüş Yönü		İki Yönlü

Operating Conditions

Max. Liquid Temperature		*35°C*
Max. Sand Content		*25 gr/m³*
Motor Protection Class		*IP68*
Max. Operation Sound		*70dB*
Max. Starting Number		*20 (start/hour)*
Max. Operating Pressure		*25 bar*
Motor Power:	*Monophase*	*0,37-2,2 kW*
	Threephase	*2,2-55kW*
Liquid Temperature		*-20°C - +120°C*
Motor Rotation Direction		*Bidirectional*

Pompa Çeşitleri / *Pump Range*

Tipi	*Type*	5HCR	10HCR	15HCR	20HCR	32HCR	45HCR	64HCR	90HCR	120HCR	150HCR
Emiş	*Suction*	1	1 1/2"	2"	2"	2 1/2"	3"	4"	4"	5"	5"
Çıkış	*Outlet*	1	1 1/2"	2"	2"	2 1/2"	3"	4"	4"	5"	5"
Debi (m³/h)	*Flow (m³/h)*	2-7	6-13	11-23	12-29	16- 36	25-55	30-80	50-110	40-160	60-200
Basma Yüksekliği (m)	*Head (m)*	7-200	11-220	6-222	3-239	7-265	11-298	9-181	7-175	16-130	7-108
Motor Gücü (kW)	*Motor Power (kW)*	0,37-4	0,75-5,5	1,1-15	1,1-18,5	1,5-30	3-45	4-37	5,5-45	15-55	15-55
Flanş	*Flange*	DN25	DN40	DN50	DN50	DN65	DN80	DN100	DN100	DN125	DN125
Pompa Mili: Paslanmaz Çelik (AISI 304)	*Pump Shaft: Stainless Steel (AISI 304)*	+	+	+	+	+	+	+	+	+	+
Kademe ve Fan: Paslanmaz Çelik	*Stage and Impeller: Stainless Steel*	+	+	+	+	+	+	+	+	+	+
Alt ve Üst Adaptörü: Pik Döküm (EN-GJL-250)	*Lower and Upper Interconnector: Cast Iron (EN-GJL-250)*	+	+	+	+	+	+	+	+	+	+
Mekanik Keçe Dolayısıyla Bakım Gerektirmez	*Because of Mechanical Seal No Need to Maintenance*										

Pompa Kodlaması / *Identification Code*

20 HCR 05 / 05

Nominal Debi (m³/sa)	*Nominal Flow Rate (m³/h)*
Pompa Modeli	*Pump Type*
Motor Gücü (HP)	*Motor Power (HP)*
Kademe Sayısı	*Stage Number*

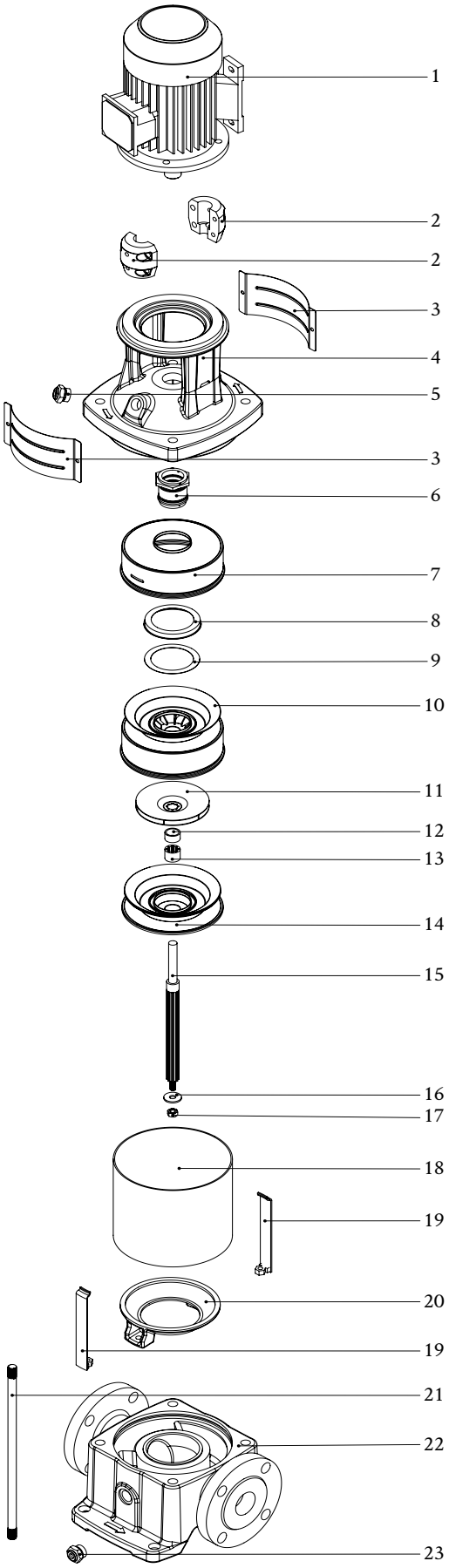

No	Ürün	Malzeme
1	Motor	-
2	Kaplin	Döküm (EN-GJL-250)
3	Kaplin Koruma Kapağı	Paslanmaz Çelik (AISI 304)
4	Motor Bağlantı Parçası	Döküm (EN-GJL-250)
5	Hava Tahliye Vidası	Paslanmaz Çelik (AISI 303)
6	Mekanik Keçe	SIC/SIC/VITON/SS304
7	Üst Kademe	Paslanmaz Çelik (AISI 304)
8	Aşınma Bileziği	Paslanmaz Çelik (AISI 304)
9	Boyun Halkası	POM
10	Kademe	Paslanmaz Çelik (AISI 304)
11	Fan	Paslanmaz Çelik (AISI 304)
12	Kademe Burcu	Paslanmaz Çelik (AISI 304)
13	Ara Burç	Bronz (ASTM B145-4A)
14	Başlangıç Kapağı	Paslanmaz Çelik (AISI 304)
15	Mil	Paslanmaz Çelik (AISI 304)
16	Kilitleme Somunu	Paslanmaz Çelik (AISI 304)
17	Son Sıkma Vidası	Paslanmaz Çelik (AISI 304)
18	Dış Kılıf Borusu	Paslanmaz Çelik (AISI 304)
19	Gergi Çıtası	Paslanmaz Çelik (AISI 304)
20	Çektirme Kapağı	Paslanmaz Çelik (AISI 304)
21	Gerdirma Saplaması	Paslanmaz Çelik (CK 45)
22	Emiş Haznesi	Döküm (EN-GJL-250)
23	Tahliye Tapası	Paslanmaz Çelik (AISI 303)

No	Components	Material
1	Motor	-
2	Coupling	Cast Iron (EN-GJL-250)
3	Coupling Guard	Stainless Steel (AISI 304)
4	Pump Head	Döküm (EN-GJL-250)
5	Air Vent Screw	Stainless Steel (AISI 303)
6	Mechanical Seal	SIC/SIC/VITON/SS304
7	Chamber / Stage, Top	Stainless Steel (AISI 304)
8	Neck Ring Retainer	Stainless Steel (AISI 304)
9	Neck Ring	POM
10	Chamber/Stage	Stainless Steel (AISI 304)
11	Impeller	Stainless Steel (AISI 304)
12	Bearing Ring	Stainless Steel (AISI 304)
13	Spacing Pipe	Bronze (ASTM B145-4A)
14	Inlet Part, Upper	Stainless Steel (AISI 304)
15	Shaft	Stainless Steel (AISI 304)
16	Lock washer	Stainless Steel (AISI 304)
17	Nut/screw	Stainless Steel (AISI 304)
18	Outer Sleeve	Stainless Steel (AISI 304)
19	Strap/Tie Rod	Stainless Steel (AISI 304)
20	Inlet Part, Lower	Stainless Steel (AISI 304)
21	Staybolt	Stainless Steel (CK 45)
22	Suction Base	Cast Iron (EN-GJL-250)
23	Drain Plug	Stainless Steel (AISI 303)

5HCR MONOBLOK HİDROFOR / *MONOBLOCK VMS PUMP*

Hidrofor Tipi *VMS Pump*	HP	kW	Kademe *Stage*	Emiş Ağızı *Suction Entrance*	Çıkış Ağızı *Outlet Entrance*	Boy / *Length (mm)* A Monofaze *Monophase*	A Trifaze *Threephase*	B	Ağırlık *Weight (kg)* Monofaze *Monophase*	Trifaze *Threephase*
5HCR 0,5/02	0,5	0,37	2	1”	1”	256	256	483	20,5	20
5HCR 0,7/03	0,75	0,55	3	1”	1”	283	283	510	22	21
5HCR 01/04	1	0,75	4	1”	1”	315	315	572	24	23
5HCR 1,5/05	1,5	1,1	5	1”	1”	339	339	599	25	24
5HCR 1,5/06	1,5	1,1	6	1”	1”	366	366	626	26	25
5HCR 02/07	2	1,5	7	1”	1”	400	400	710	31	29
5HCR 02/08	2	1,5	8	1”	1”	427	427	737	32	30
5HCR 03/09	3	2,2	9	1”	1”	454	454	764	34	32
5HCR 03/10	3	2,2	10	1”	1”	581	581	791	35	33
5HCR 03/12	3	2,2	12	1”	1”	535	535	845	37	35
5HCR 04/16	4	3	16	1”	1”	671	-	1001	50	50
5HCR 05/19	5,5	4	19	1”	1”	752	-	1082	62	62
5HCR 05/22	5,5	4	22	1”	1”	833	-	1163	65	65

5HCR TEKLİ / İKİLİ / ÜÇLÜ HİDROFOR / *SINGLE / DOUBLE / TRIPLE VMS PUMP*

Hidrofor Tipi *VMS Pump*	Ölçüler / *Dimensions (mm)* Yükseklik / *Height* H	H1	Tekli / *Single* B	B1	B2	İkili / *Double* B	B1	B2	Üçlü / *Triple* B	B1	B2	Ağırlık / *Weight (kg)* Tekli *Single*	İkili *Double*	Üçlü *Triple*
5HCR 0,5/02	755	190	320	320	480	640	350	800	950	350	1100	34	60	82
5HCR 0,7/03	785	190	320	320	480	640	350	800	950	350	1100	35	63	85
5HCR 01/04	815	190	320	320	480	640	350	800	950	350	1100	38	68	88
5HCR 1,5/05	845	190	320	320	480	640	350	800	950	350	1100	39	69	89
5HCR 1,5/06	875	190	320	320	480	640	350	800	950	350	1100	40	73	92
5HCR 02/07	900	190	320	320	480	640	350	800	950	350	1100	44	78	96
5HCR 02/08	930	190	320	320	480	640	350	800	950	350	1100	45	84	102
5HCR 03/09	960	190	320	320	480	640	350	800	950	350	1100	47	86	104
5HCR 03/10	990	190	320	320	480	640	350	800	950	350	1100	50	87	106
5HCR 03/12	1050	190	320	320	480	640	350	800	950	350	1100	52	91	109
5HCR 04/16	1170	190	320	320	480	640	350	800	950	350	1100	67	128	150
5HCR 05/19	1260	190	320	320	480	640	350	800	950	350	1100	80	136	152
5HCR 05/22	1350	190	320	320	480	640	350	800	950	350	1100	82	143	161

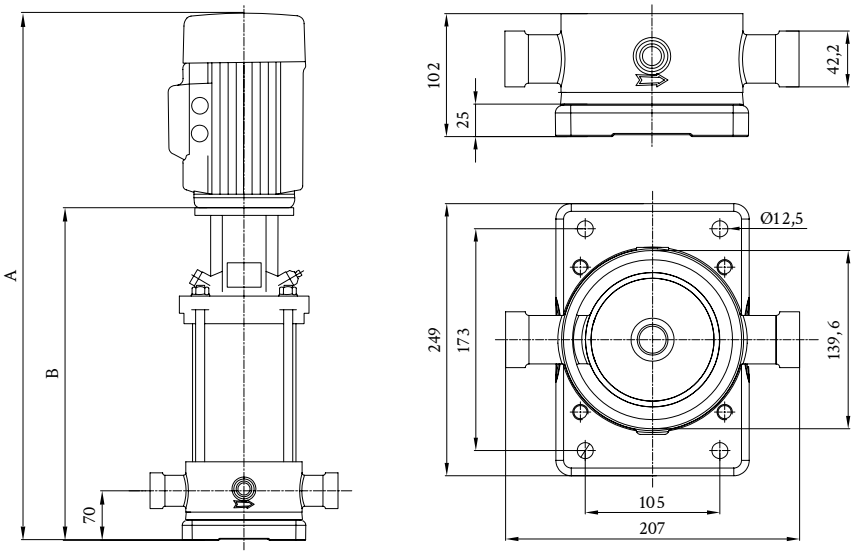

10HCR MONOBLOK HİDROFOR / *MONOBLOCK VMS PUMP*

Hidrofor Tipi *VMS Pump*	HP	kW	Kademe *Stage*	Emiş Ağızı *Suction Entrance*	Çıkış Ağızı *Outlet Entrance*	Boy / *Length (mm)* A Monofaze *Monophase*	Boy / *Length (mm)* A Trifaze *Threephase*	Boy / *Length (mm)* B	Ağırlık *Weight (kg)* Monofaze *Monophase*	Ağırlık *Weight (kg)* Trifaze *Threephase*
10HCR 01/02	1	0,75	2	1 1/2"	1 1/2"	640	640	347	36	34
10HCR 1,5/03	1,5	1,1	3	1 1/2"	1 1/2"	670	670	377	39	38
10HCR 02/04	2	1,5	4	1 1/2"	1 1/2"	700	700	423	47	46
10HCR 03/05	3	2,2	5	1 1/2"	1 1/2"	730	730	453	49	47
10HCR 03/06	3	2,2	6	1 1/2"	1 1/2"	760	760	483	50	48
10HCR 04/07	4	3	7	1 1/2"	1 1/2"	-	790	518	55	54
10HCR 04/08	4	3	8	1 1/2"	1 1/2"	-	820	548	56	55
10HCR 04/09	4	3	9	1 1/2"	1 1/2"	-	850	578	57	56
10HCR 05/10	5,5	4	10	1 1/2"	1 1/2"	-	900	608	69	68
10HCR 05/12	5,5	4	12	1 1/2"	1 1/2"	-	960	668	70	70
10HCR 07/14	7,5	5,5	14	1 1/2"	1 1/2"	-	1020	760	94	93
10HCR 07/16	7,5	5,5	16	1 1/2"	1 1/2"	-	1080	820	96	95
10HCR 10/18	10	7,5	18	1 1/2"	1 1/2"	-	1150	880	101	99
10HCR 10/20	10	7,5	20	1 1/2"	1 1/2"	-	1220	940	103	101
10HCR 10/22	10	7,5	22	1 1/2"	1 1/2"	-	1280	1000	105	104

10HCR TEKLİ / İKİLİ / ÜÇLÜ HİDROFOR / *SINGLE / DOUBLE / TRIPLE VMS PUMP*

Hidrofor Tipi *VMS Pump*	Ölçüler / *Dimensions (mm)* Yükseklik / *Height* H	Yükseklik / *Height* H1	Tekli / *Single* B	Tekli / *Single* B1	Tekli / *Single* B2	İkili / *Double* B	İkili / *Double* B1	İkili / *Double* B2	Üçlü / *Triple* B	Üçlü / *Triple* B1	Üçlü / *Triple* B2	Ağırlık / *Weight (kg)* Tekli *Single*	Ağırlık / *Weight (kg)* İkili *Double*	Ağırlık / *Weight (kg)* Üçlü *Triple*
10HCR 01/02	760	200	325	360	500	650	360	800	950	360	1100	48	81	103
10HCR 1,5/03	790	200	325	360	500	650	360	800	950	360	1100	51	84	106
10HCR 02/04	820	200	325	360	500	650	360	800	950	360	1100	59	92	114
10HCR 03/05	850	200	325	360	500	650	360	800	950	360	1100	61	94	116
10HCR 03/06	880	200	325	360	500	650	360	800	950	360	1100	62	95	117
10HCR 04/07	910	200	325	360	500	650	360	800	950	360	1100	67	100	122
10HCR 04/08	940	200	325	360	500	650	360	800	950	360	1100	68	101	123
10HCR 04/09	970	200	325	360	500	650	360	800	950	360	1100	69	102	124
10HCR 05/10	1020	200	325	360	500	650	360	800	950	360	1100	81	114	136
10HCR 05/12	1080	200	325	360	500	650	360	800	950	360	1100	83	116	138
10HCR 07/14	1140	200	325	360	500	650	360	800	950	360	1100	106	139	161
10HCR 07/16	1200	200	325	360	500	650	360	800	950	360	1100	108	141	163
10HCR 10/18	1270	200	325	360	500	650	360	800	950	360	1100	113	146	168
10HCR 10/20	1340	200	325	360	500	650	360	800	950	360	1100	115	148	170
10HCR 10/22	1400	200	325	360	500	650	360	800	950	360	1100	117	150	172

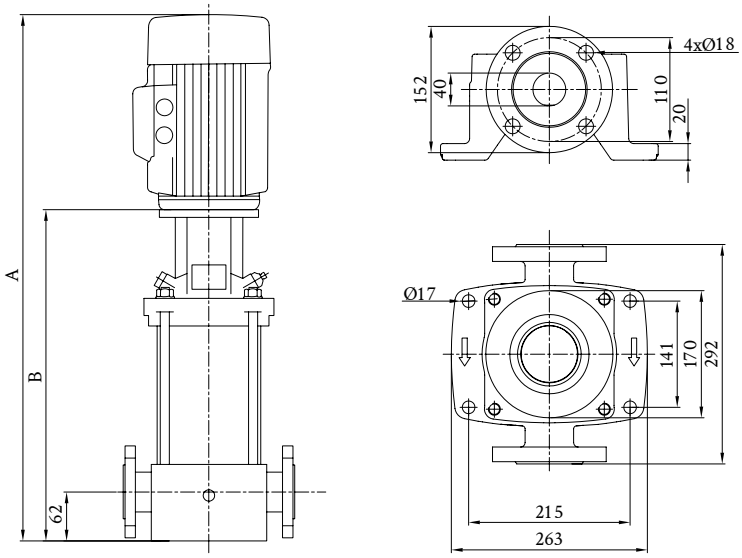

15HCR MONOBLOK HİDROFOR / *MONOBLOCK VMS PUMP*

Hidrofor Tipi *VMS Pump*	HP	kW	Kademe *Stage*	Emiş Ağızı *Suction Entrance*	Çıkış Ağızı *Outlet Entrance*	Boy / *Length (mm)* A Monofaze *Monophase*	Boy / *Length (mm)* A Trifaze *Threephase*	Boy / *Length (mm)* B	Ağırlık *Weight (kg)* Monofaze *Monophase*	Ağırlık *Weight (kg)* Trifaze *Threephase*
15HCR 1,5/01	1,5	1,1	1	2 "	2 "	598	700	400	42	39
15HCR 03/02	3	2,2	2	2 "	2 "	747	750	415	50	47
15HCR 04/03	4	3	3	2 "	2 "	793	800	465	55	53
15HCR 05/04	5,5	4	4	2 "	2 "	846	850	510	68	65
15HCR 05/05	5,5	4	5	2 "	2 "	893	900	555	69	67
15HCR 07/06	7,5	5,5	6	2 "	2 "	-	940	632	-	89
15HCR 07/07	7,5	5,5	7	2 "	2 "	-	980	677	-	90
15HCR 10/08	10	7,5	8	2 "	2 "	-	1030	720	-	94
15HCR 10/09	10	7,5	9	2 "	2 "	-	1100	765	-	96
15HCR 15/10	15	11	10	2 "	2 "	-	1180	887	-	148
15HCR 15/12	15	11	12	2 "	2 "	-	1350	977	-	151
15HCR 15/14	15	11	14	2 "	2 "	-	1440	1067	-	154
15HCR 20/17	20	15	17	2 "	2 "	-	1550	1202	-	171

15HCR TEKLİ / İKİLİ / ÜÇLÜ HİDROFOR / *SINGLE / DOUBLE / TRIPLE VMS PUMP*

Hidrofor Tipi *VMS Pump*	Ölçüler / *Dimensions (mm)* Yükseklik / *Height* H	H1	Tekli / *Single* B	B1	B2	İkili / *Double* B	B1	B2	Üçlü / *Triple* B	B1	B2	Ağırlık / *Weight (kg)* Tekli *Single*	İkili *Double*	Üçlü *Triple*
15HCR 1,5/01	820	210	325	360	570	950	360	1100	950	360	1100	55	92	114
15HCR 03/02	870	210	325	360	570	950	360	1100	950	360	1100	63	100	122
15HCR 04/03	920	210	325	360	570	950	360	1100	950	360	1100	68	105	127
15HCR 05/04	970	210	325	360	570	950	360	1100	950	360	1100	81	118	140
15HCR 05/05	1020	210	325	360	570	950	360	1100	950	360	1100	82	119	141
15HCR 07/06	1060	210	325	360	570	950	360	1100	950	360	1100	102	139	161
15HCR 07/07	1100	210	325	360	570	950	360	1100	950	360	1100	103	140	162
15HCR 10/08	1150	210	325	360	570	950	360	1100	950	360	1100	107	144	166
15HCR 10/09	1200	210	325	360	570	950	360	1100	950	360	1100	109	146	168
15HCR 15/10	1250	210	325	360	570	950	360	1100	950	360	1100	161	198	220
15HCR 15/12	1340	210	325	360	570	950	360	1100	950	360	1100	164	201	223
15HCR 15/14	1430	210	325	360	570	950	360	1100	950	360	1100	167	204	226
15HCR 20/17	1620	210	325	360	570	950	360	1100	950	360	1100	184	221	243

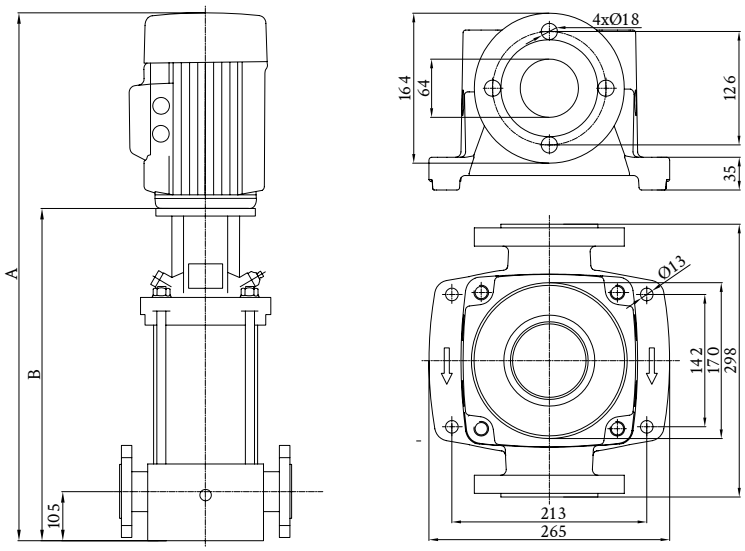

20HCR MONOBLOK HİDROFOR / *MONOBLOCK VMS PUMP*

Hidrofor Tipi *VMS Pump*	HP	kW	Kademe *Stage*	Emiş Ağızı *Suction Entrance*	Çıkış Ağızı *Outlet Entrance*	Boy / *Length (mm)* A Monofaze *Monophase*	A Trifaze *Threephase*	B	Ağırlık *Weight (kg)* Monofaze *Monophase*	Trifaze *Threephase*
20HCR 1,5/01	1,5	1,1	1	2 "	2 "	-	700	400	39	42
20HCR 03/02	3	2,2	2	2 "	2 "	-	750	415	47	50
20HCR 05/03	5,5	4	3	2 "	2 "	-	800	465	64	66
20HCR 07/04	7,5	5,5	4	2 "	2 "	-	850	542	86	88
20HCR 07/05	7,5	5,5	5	2 "	2 "	-	900	587	87	90
20HCR 10/06	10	7,5	6	2 "	2 "	-	940	632	111	93
20HCR 10/07	10	7,5	7	2 "	2 "	-	980	677	92	95
20HCR 15/08	15	11	8	2 "	2 "	-	1030	799	144	147
20HCR 15/10	15	11	10	2 "	2 "	-	1180	889	148	150
20HCR 20/12	20	15	12	2 "	2 "	-	1350	979	163	166
20HCR 20/14	20	15	14	2 "	2 "	-	1440	1069	166	170
20HCR 25/17	25	18,5	17	2 "	2 "	-	1550	1204	184	188

20HCR TEKLİ / İKİLİ / ÜÇLÜ HİDROFOR / *SINGLE / DOUBLE / TRIPLE VMS PUMP*

Hidrofor Tipi *VMS Pump*	Ölçüler / *Dimensions (mm)* Yükseklik / *Height* H	H1	Tekli / *Single* B	B1	B2	İkili / *Double* B	B1	B2	Üçlü / *Triple* B	B1	B2	Ağırlık / *Weight (kg)* Tekli *Single*	İkili *Double*	Üçlü *Triple*
20HCR 1,5/01	820	210	325	360	570	650	360	800	950	360	1100	55	134	198
20HCR 03/02	870	210	325	360	570	650	360	800	950	360	1100	63	150	222
20HCR 05/03	920	210	325	360	570	650	360	800	950	360	1100	79	182	270
20HCR 07/04	970	210	325	360	570	650	360	800	950	360	1100	101	226	336
20HCR 07/05	1020	210	325	360	570	650	360	800	950	360	1100	103	230	342
20HCR 10/06	1060	210	325	360	570	650	360	800	950	360	1100	106	236	351
20HCR 10/07	1100	210	325	360	570	650	360	800	950	360	1100	108	240	357
20HCR 15/08	1150	210	325	360	570	650	360	800	950	360	1100	160	34	513
20HCR 15/10	1250	210	325	360	570	650	360	800	950	360	1100	163	350	522
20HCR 20/12	1840	210	325	360	570	650	360	800	950	360	1100	179	382	570
20HCR 20/14	1430	210	325	360	570	650	360	800	950	360	1100	183	390	582
20HCR 25/17	1620	210	325	360	570	650	360	800	950	360	1100	201	426	635

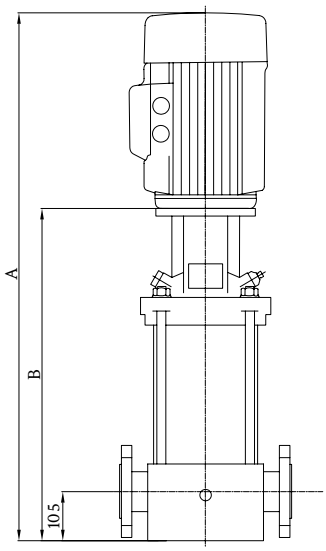

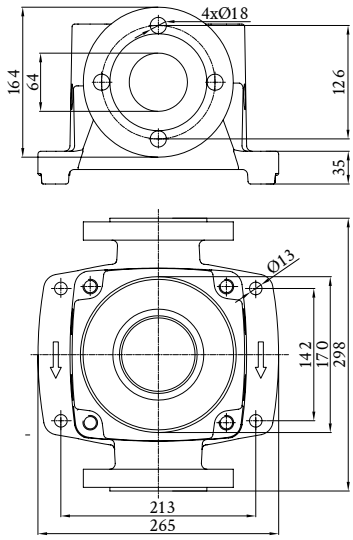

32HCR MONOBLOK HİDROFOR / *MONOBLOCK VMS PUMP*

Hidrofor Tipi *VMS Pump*	HP	kW	Kademe *Stage*	Emiş Ağızı *Suction Entrance*	Çıkış Ağızı *Outlet Entrance*	Boy / *Length (mm)* A Monofaze *Monophase*	A Trifaze *Threephase*	B	Ağırlık *Weight (kg)* Monofaze *Monophase*	Trifaze *Threephase*
32HCR 02/01-1	2	1,5	1	2 1/2"	2 1/2"	-	800	505	-	80
32HCR 03/01	3	2,2	1	2 1/2"	2 1/2"	-	800	505	-	85
32HCR 04/02-2	4	3	2	2 1/2"	2 1/2"	-	870	575	-	95
32HCR 05/02	5,5	4	2	2 1/2"	2 1/2"	-	870	575	-	105
32HCR 07/03	7,5	5,5	3	2 1/2"	2 1/2"	-	970	645	-	115
32HCR 10/04	10	7,5	4	2 1/2"	2 1/2"	-	1040	715	-	125
32HCR 15/05	15	11	5	2 1/2"	2 1/2"	-	1190	895	-	165
32HCR 15/06	15	11	6	2 1/2"	2 1/2"	-	1260	965	-	170
32HCR 20/07	20	15	7	2 1/2"	2 1/2"	-	1500	1035	-	205
32HCR 20/08	20	15	8	2 1/2"	2 1/2"	-	1570	1105	-	210
32HCR 25/09	25	18,5	9	2 1/2"	2 1/2"	-	1640	1175	-	220
32HCR 25/10	25	18,5	10	2 1/2"	2 1/2"	-	1710	1245	-	225
32HCR 30/11	30	22	11	2 1/2"	2 1/2"	-	1780	1315	-	285
32HCR 30/12	30	22	12	2 1/2"	2 1/2"	-	1850	1385	-	285
32HCR 40/13	40	30	13	2 1/2"	2 1/2"	-	1920	1455	-	370
32HCR 40/14	40	30	14	2 1/2"	2 1/2"	-	1990	1525	-	375

32HCR TEKLİ / İKİLİ / ÜÇLÜ HİDROFOR / *SINGLE / DOUBLE / TRIPLE VMS PUMP*

Hidrofor Tipi *VMS Pump*	Ölçüler / *Dimensions (mm)* Yükseklik / *Height* H	H1	Tekli / *Single* B	B1	B2	İkili / *Double* B	B1	B2	Üçlü / *Triple* B	B1	B2	Ağırlık / *Weight (kg)* Tekli *Single*	İkili *Double*	Üçlü *Triple*
32HCR 02/01-1	850	225	450	400	600	900	400	1000	450	400	600	95	215	320
32HCR 03/01	920	225	450	400	600	900	400	1000	450	400	600	100	225	335
32HCR 04/02-2	990	225	450	400	600	900	400	1000	450	400	600	110	245	365
32HCR 05/02	990	225	450	400	600	900	400	1000	450	400	600	120	265	395
32HCR 07/03	1090	225	450	400	600	900	400	1000	450	400	600	130	285	425
32HCR 10/04	1160	225	450	400	600	900	400	1000	450	400	600	140	305	455
32HCR 15/05	1310	225	450	400	600	900	400	1000	450	400	600	180	385	575
32HCR 15/06	1380	225	450	400	600	900	400	1000	450	400	600	185	395	590
32HCR 20/07	1620	225	450	400	600	900	400	1000	450	400	600	220	465	695
32HCR 20/08	1690	225	450	400	600	900	400	1000	450	400	600	225	475	710
32HCR 25/09	1760	225	450	400	600	900	400	1000	450	400	600	235	495	740
32HCR 25/10	1830	225	450	400	600	900	400	1000	450	400	600	240	505	755
32HCR 30/11	1900	225	450	400	600	900	400	1000	450	400	600	300	625	935
32HCR 30/12	1970	225	450	400	600	900	400	1000	450	400	600	342	625	935
32HCR 40/13	2040	225	450	400	600	900	400	1000	450	400	600	385	795	1190
32HCR 40/14	2110	225	450	400	600	900	400	1000	450	400	600	390	805	1205

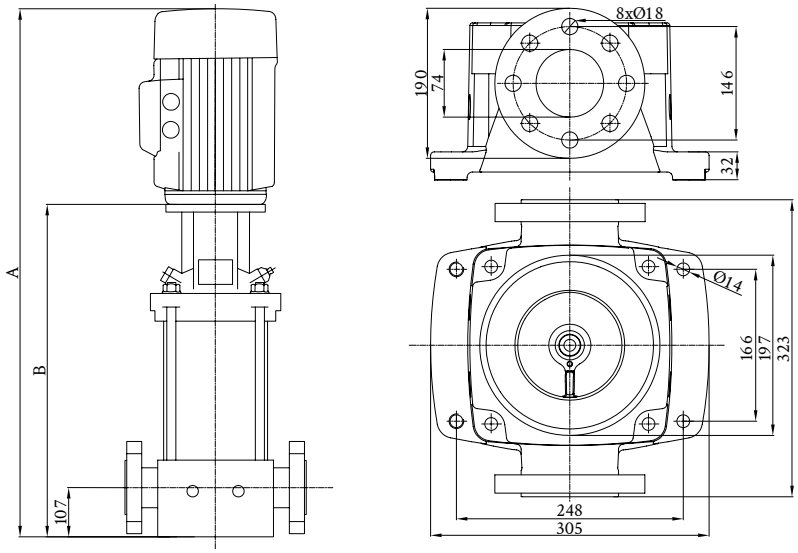

45HCR MONOBLOK HİDROFOR / *MONOBLOCK VMS PUMP*

Hidrofor Tipi *VMS Pump*	HP	kW	Kademe *Stage*	Emiş Ağızı *Suction Entrance*	Çıkış Ağızı *Outlet Entrance*	Boy / *Length (mm)* A Monofaze *Monophase*	A Trifaze *Threephase*	B	Ağırlık *Weight (kg)* Monofaze *Monophase*	Trifaze *Threephase*
45HCR 04/01-1	4	3	1	3”	3”	-	860	558	-	36
45HCR 05/01	5,5	4	1	3”	3”	-	860	558	-	39
45HCR 07/02-2	7,5	5,5	2	3”	3”	-	1000	638	-	47
45HCR 10/02	10	7,5	2	3”	3”	-	1000	638	-	49
45HCR 15/03	15	11	3	3”	3”	-	1140	828	-	50
45HCR 20/04	20	15	4	3”	3”	-	1360	908	-	55
45HCR 25/05	25	18,5	5	3”	3”	-	1440	988	-	56
45HCR 30/06	30	22	6	3”	3”	-	1520	1068	-	57
45HCR 40/07	40	30	7	3”	3”	-	1600	1148	-	69
45HCR 40/08	40	30	8	3”	3”	-	1680	1228	-	70
45HCR 40/09-2	40	30	9	3”	3”	-	1760	1308	-	94
45HCR 50/09	50	37	9	3”	3”	-	1760	1308	-	96
45HCR 50/10	50	37	10	3”	3”	-	1840	1388	-	101
45HCR 60/11	60	45	11	3”	3”	-	1920	1468	-	103
45HCR 60/12	60	45	12	3”	3”	-	2000	1556	-	105

45HCR TEKLİ / İKİLİ / ÜÇLÜ HİDROFOR / *SINGLE / DOUBLE / TRIPLE VMS PUMP*

Hidrofor Tipi *VMS Pump*	Ölçüler / *Dimensions (mm)* Yükseklik / *Height* H	H1	Tekli / *Single* B	B1	B2	İkili / *Double* B	B1	B2	Üçlü / *Triple* B	B1	B2	Ağırlık / *Weight (kg)* Tekli *Single*	İkili *Double*	Üçlü *Triple*
45HCR 04/01-1	980	260	450	400	700	900	400	1000	1300	400	1500	117	260	390
45HCR 05/01	980	260	450	400	700	900	400	1000	1300	400	1500	127	280	420
45HCR 07/02-2	1120	260	450	400	700	900	400	1000	1300	400	1500	137	300	450
45HCR 10/02	1120	260	450	400	700	900	400	1000	1300	400	1500	142	310	465
45HCR 15/03	1260	260	450	400	700	900	400	1000	1300	400	1500	182	390	585
45HCR 20/04	1480	260	450	400	700	900	400	1000	1300	400	1500	222	470	705
45HCR 25/05	1560	260	450	400	700	900	400	1000	1300	400	1500	232	490	735
45HCR 30/06	1640	260	450	400	700	900	400	1000	1300	400	1500	292	610	915
45HCR 40/07	1720	260	450	400	700	900	400	1000	1300	400	1500	372	770	1155
45HCR 40/08	1800	260	450	400	700	900	400	1000	1300	400	1500	377	780	1170
45HCR 40/09-2	1880	260	450	400	700	900	400	1000	1300	400	1500	382	790	1185
45HCR 50/09	1880	260	450	400	700	900	400	1000	1300	400	1500	382	790	1185
45HCR 50/10	1960	260	450	400	700	900	400	1000	1300	400	1500	407	840	1260
45HCR 60/11	2040	260	450	400	700	900	400	1000	1300	400	1500	472	970	1455
45HCR 60/12	2120	260	450	400	700	900	400	1000	1300	400	1500	477	980	1470

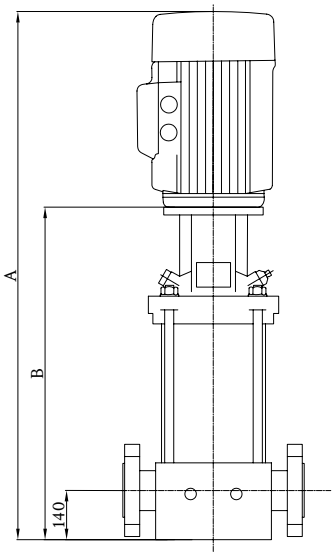

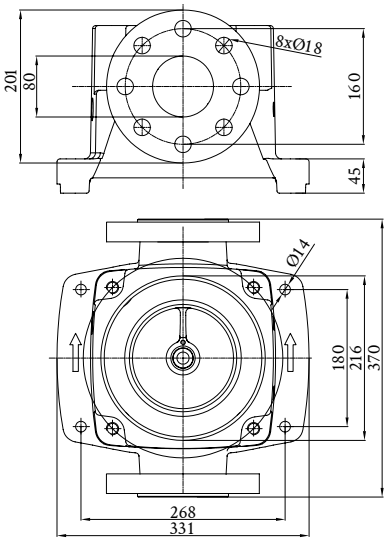

64HCR MONOBLOK HİDROFOR / *MONOBLOCK VMS PUMP*

Hidrofor Tipi *VMS Pump*	HP	kW	Kademe *Stage*	Emiş Ağızı *Suction Entrance*	Çıkış Ağızı *Outlet Entrance*	Boy / *Length (mm)* A Monofaze *Monophase*	Boy / *Length (mm)* A Trifaze *Threephase*	Boy / *Length (mm)* B	Ağırlık *Weight (kg)* Monofaze *Monophase*	Ağırlık *Weight (kg)* Trifaze *Threephase*
64HCR 05/01-1	5,5	4	1	4”	4”	740	1020	561	-	105
64HCR 07/01	7,5	5,5	1	4”	4”	740	1020	561	-	120
64HCR 10/02-2	10	7,5	2	4”	4”	760	1140	644	-	130
64HCR 15/02	15	11	2	4”	4”	760	1140	754	-	165
64HCR 20/03-1	20	15	3	4”	4”	850	1300	836	-	205
64HCR 25/03	25	18,5	3	4”	4”	850	1300	836	-	205
64HCR 25/04-2	25	18,5	4	4”	4”	930	1380	919	-	215
64HCR 30/04	30	22	4	4”	4”	930	1380	919	-	270
64HCR 40/05	40	30	5	4”	4”	1000	1470	1001	-	350
64HCR 40/06-2	40	30	6	4”	4”	1070	1550	1084	-	355
64HCR 50/06	50	37	6	4”	4”	1070	1550	1084	-	375
64HCR 50/07-2	50	37	7	4”	4”	1150	1630	1166	-	380

64HCR TEKLİ / İKİLİ / ÜÇLÜ HİDROFOR / *SINGLE / DOUBLE / TRIPLE VMS PUMP*

Hidrofor Tipi *VMS Pump*	Ölçüler / *Dimensions (mm)* Yükseklik / *Height* H	Yükseklik / *Height* H1	Tekli / *Single* B	Tekli / *Single* B1	Tekli / *Single* B2	İkili / *Double* B	İkili / *Double* B1	İkili / *Double* B2	Üçlü / *Triple* B	Üçlü / *Triple* B1	Üçlü / *Triple* B2	Ağırlık / *Weight (kg)* Tekli *Single*	Ağırlık / *Weight (kg)* İkili *Double*	Ağırlık / *Weight (kg)* Üçlü *Triple*
64HCR 05/01-1	1140	260	450	400	700	900	400	1100	1300	400	1500	125	280	413
64HCR 07/01	1140	260	450	400	700	900	400	1100	1300	400	1500	140	310	458
64HCR 10/02-2	1260	260	450	400	700	900	400	1100	1300	400	1500	150	330	488
64HCR 15/02	1260	260	450	400	700	900	400	1100	1300	400	1500	185	400	593
64HCR 20/03-1	1420	260	450	400	700	900	400	1100	1300	400	1500	225	480	713
64HCR 25/03	1420	260	450	400	700	900	400	1100	1300	400	1500	235	500	743
64HCR 25/04-2	1500	260	450	400	700	900	400	1100	1300	400	1500	235	500	743
64HCR 30/04	1500	260	450	400	700	900	400	1100	1300	400	1500	290	610	908
64HCR 40/05	1590	260	450	400	700	900	400	1100	1300	400	1500	370	770	1148
64HCR 40/06-2	1670	260	450	400	700	900	400	1100	1300	400	1500	375	780	1163
64HCR 50/06	1670	260	450	400	700	900	400	1100	1300	400	1500	395	820	1223
64HCR 50/07-2	1750	260	450	400	700	900	400	1100	1300	400	1500	400	830	1238

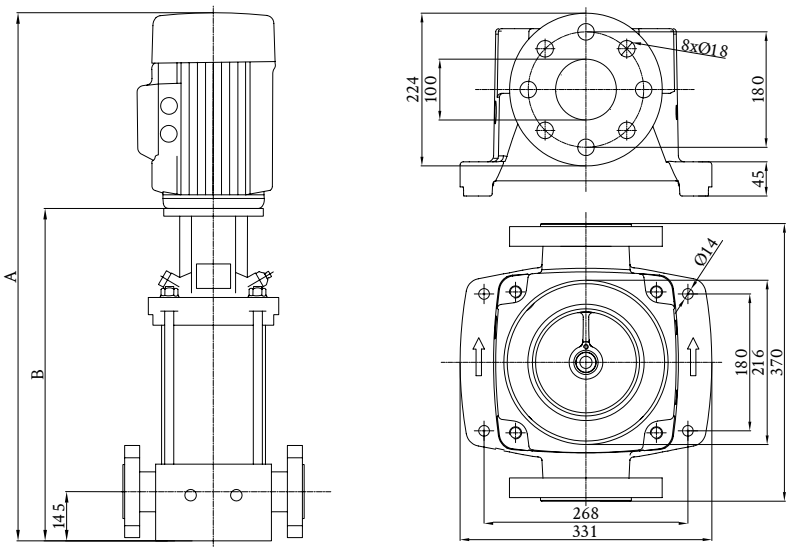

90HCR MONOBLOK HİDROFOR / *MONOBLOCK VMS PUMP*

Hidrofor Tipi *VMS Pump*	HP	kW	Kademe *Stage*	Emiş Ağızı *Suction Entrance*	Çıkış Ağızı *Outlet Entrance*	Boy / *Length (mm)* A Monofaze *Monophase*	A Trifaze *Threephase*	B	Ağırlık *Weight (kg)* Monofaze *Monophase*	Trifaze *Threephase*
90HCR 07/01-1	7,5	5,5	1	4”	4”	-	104	571	-	125
90HCR 10/01	10	7,5	1	4”	4”	-	104	571	-	130
90HCR 15/02-2	15	11	2	4”	4”	-	113	773	-	170
90HCR 20/02	20	15	2	4”	4”	-	130	773	-	205
90HCR 25/03-2	25	18,5	3	4”	4”	-	140	865	-	220
90HCR 30/03	30	22	3	4”	4”	-	140	865	-	270
90HCR 40/04	40	30	4	4”	4”	-	149	957	-	355
90HCR 50/05	50	37	5	4”	4”	-	158	1049	-	380
90HCR 60/06	60	45	6	4”	4”	-	167	1141	-	445

90HCR TEKLİ / İKİLİ / ÜÇLÜ HİDROFOR / *SINGLE / DOUBLE / TRIPLE VMS PUMP*

Hidrofor Tipi *VMS Pump*	Ölçüler / *Dimensions (mm)* Yükseklik / *Height* H	H1	Tekli / *Single* B	B1	B2	İkili / *Double* B	B1	B2	Üçlü / *Triple* B	B1	B2	Ağırlık / *Weight (kg)* Tekli *Single*	İkili *Double*	Üçlü *Triple*
90HCR 07/01-1	1160	260	450	400	700	900	400	1100	1300	400	1500	145	318	472
90HCR 10/01	1160	260	450	400	700	900	400	1100	1300	400	1500	150	328	487
90HCR 15/02-2	1250	260	450	400	700	900	400	1100	1300	400	1500	190	408	607
90HCR 20/02	1420	260	450	400	700	900	400	1100	1300	400	1500	225	478	712
90HCR 25/03-2	1520	260	450	400	700	900	400	1100	1300	400	1500	240	508	757
90HCR 30/03	1520	260	450	400	700	900	400	1100	1300	400	1500	290	608	907
90HCR 40/04	1610	260	450	400	700	900	400	1100	1300	400	1500	375	778	1162
90HCR 50/05	1700	260	450	400	700	900	400	1100	1300	400	1500	400	828	1237
90HCR 60/06	1790	260	450	400	700	900	400	1100	1300	400	1500	465	958	1432

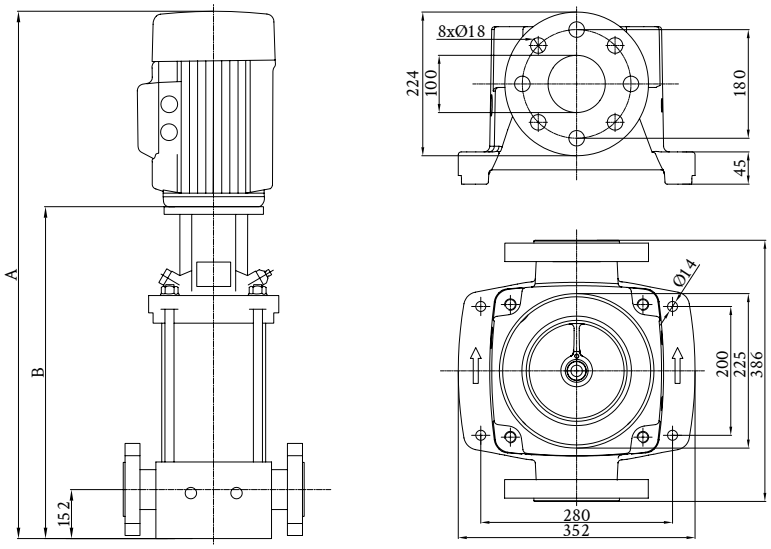

Emiş - Çıkış / Suction - Outlet Tekli / Single: 1” - 1” İkili / Double: 1 1/2” - 1 1/2” Üçlü / Triple: 2” - 2”

Hidrofor Tipi *VMS Pump*	Kademe Sayısı *Stage No.*	HP	kW	V	Basma Yüksekliği / *Head (m)*						
					I 0 (m³/h)	2	3	4	5	6	7
					II 0 (m³/h)	4	6	8	10	12	14
					III 0 (m³/h)	6	9	12	15	18	21
5HCR 0,5/02	2	0,5	0,37	380	18	17	16	14	12	9	7
5HCR 0,7/03	3	0,75	0,55	380	29	26	25	23	19	17	13
5HCR 01/04	4	1	0,75	380	38	35	33	31	26	23	17
5HCR 1,5/05	5	1,5	1,1	380	49	44	42	39	33	30	22
5HCR 1,5/06	6	1,5	1,1	380	57	53	51	47	40	36	27
5HCR 02/07	7	2	1,5	380	68	62	60	55	47	42	33
5HCR 02/08	8	2	1,5	380	78	71	69	63	54	49	37
5HCR 03/09	9	3	2,2	380	87	80	77	71	62	55	43
5HCR 03/10	10	3	2,2	380	96	89	86	80	70	61	49
5HCR 03/12	12	3	2,2	380	118	107	103	94	84	74	56
5HCR 04/16	16	4	3	380	156	143	139	128	114	100	77
5HCR 05/19	19	5,5	4	380	185	170	167	152	136	121	94
5HCR 05/22	22	5,5	4	380	218	200	190	176	159	137	107

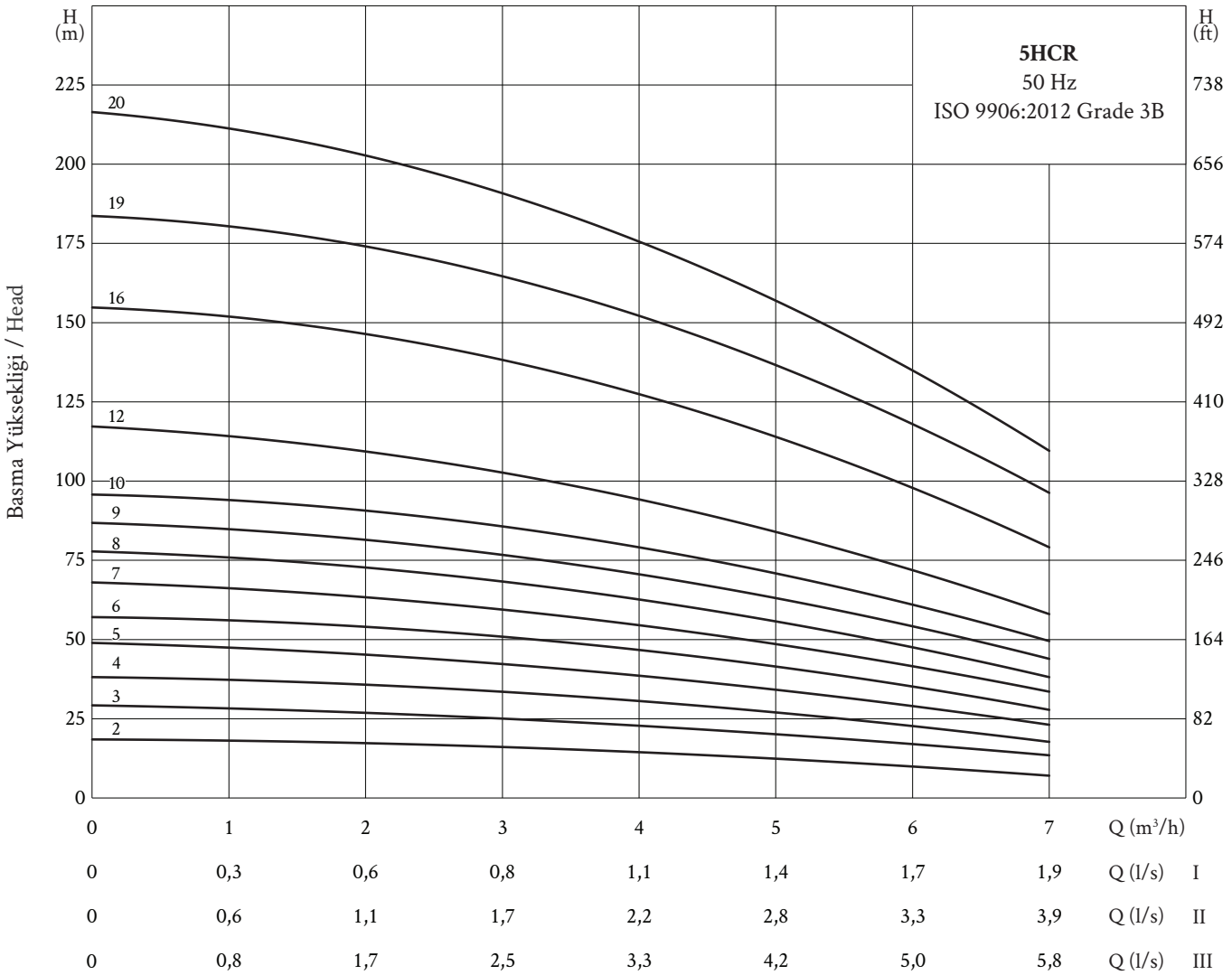

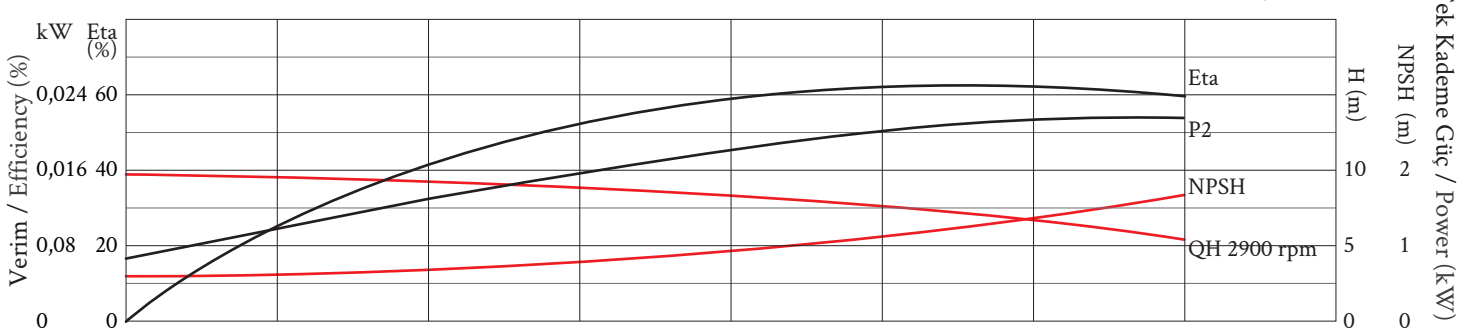

Emiş - Çıkış / Suction - Outlet Tekli / Single: 1 1/2" - 1 1/2" İkili / Double: 2" - 2" Üçlü / Triple: 2 1/2" - 2 1/2"

Hidrofor Tipi *VMS Pump*	Kademe Sayısı *Stage No.*	HP	kW	V		Basma Yüksekliği / *Head (m)*							
					I 0 (m³/h)	6	7	8	9	10	11	12	13
					II 0 (m³/h)	12	14	16	18	20	22	24	26
					III 0 (m³/h)	18	21	24	27	30	33	36	39
10HCR 01/02	2	1	0,75	380	20	19	18	17	16	15	14	13	11
10HCR 1,5/03	3	1,5	1,1	380	30	28	27	26	25	23	21	19	17
10HCR 02/04	4	2	1,5	380	40	38	37	36	35	32	30	26	23
10HCR 03/05	5	3	2,2	380	50	48	47	45	44	40	37	33	29
10HCR 03/06	6	3	2,2	380	60	58	56	54	52	48	45	40	34
10HCR 04/07	7	4	3	380	70	68	66	63	61	56	52	46	41
10HCR 04/08	8	4	3	380	80	78	75	72	70	64	60	53	46
10HCR 04/09	9	4	3	380	90	88	85	81	79	73	68	60	52
10HCR 05/10	10	5,5	4	380	102	100	95	90	88	80	66	66	58
10HCR 05/12	12	5,5	4	380	122	119	117	108	104	97	80	80	70
10HCR 07/14	14	7,5	5,5	380	142	140	138	128	123	117	92	92	80
10HCR 07/16	16	7,5	5,5	380	163	158	156	144	140	129	106	106	90
10HCR 10/18	18	10	7,5	380	184	181	178	168	160	150	121	121	108
10HCR 10/20	20	10	7,5	380	205	202	198	188	178	163	137	137	118
10HCR 10/22	22	10	7,5	380	225	220	216	205	193	182	148	148	128

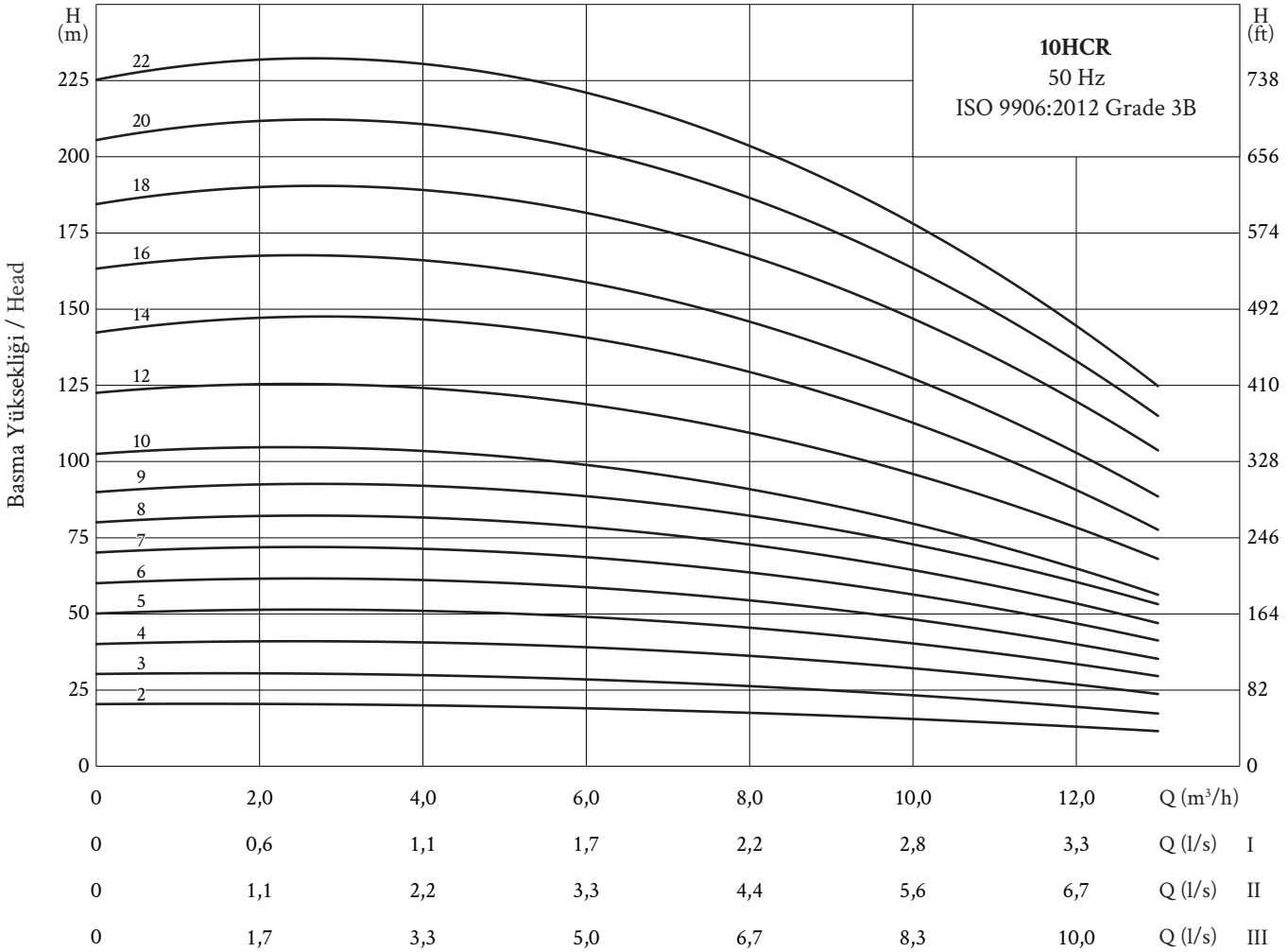

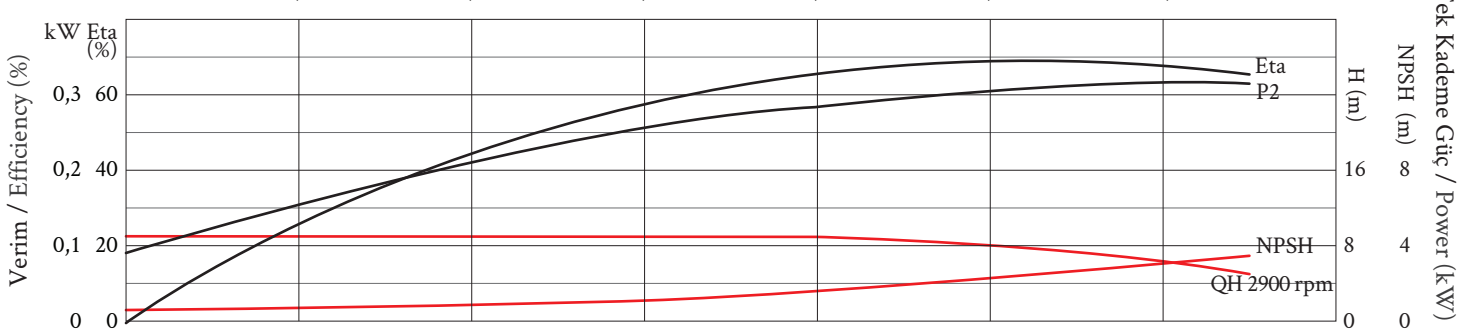

Emiş - Çıkış / Suction - Outlet Tekli / Single: 2” - 2” İkili / Double: 2 1/2” - 2 1/2” Üçlü / Triple: 3” - 3”

Hidrofor Tipi *VMS Pump*	Kademe Sayısı *Stage No.*	HP	kW	V		Basma Yüksekliği / *Head (m)*						
					I 0 (m³/h)	11	13	15	17	19	21	23
					II 0 (m³/h)	22	26	30	34	38	42	46
					III 0 (m³/h)	33	39	45	51	57	63	59
15HCR 1,5/01	1	1,5	1,1	380	13	12	11	10	9	8	7	6
15HCR 03/02	2	3	2,2	380	26	25	22	21	20	19	18	14
15HCR 04/03	3	4	3	380	40	39	38	33	31	30	29	24
15HCR 05/04	4	5,5	4	380	53	51	49	48	44	41	34	31
15HCR 05/05	5	5,5	4	380	66	64	62	60	56	51	43	40
15HCR 07/06	6	7,5	5,5	380	80	77	76	71	67	61	53	51
15HCR 07/07	7	7,5	5,5	380	93	91	87	82	78	70	62	60
15HCR 10/08	8	10	7,5	380	107	104	100	96	89	81	72	65
15HCR 10/09	9	10	7,5	380	120	118	112	109	101	92	83	73
15HCR 15/10	10	15	11	380	135	131	128	121	112	103	97	81
15HCR 15/12	12	15	11	380	160	157	151	144	134	122	110	99
15HCR 15/14	14	15	11	380	186	183	176	169	157	142	130	111
15HCR 20/17	17	20	15	380	228	222	212	205	190	178	160	140

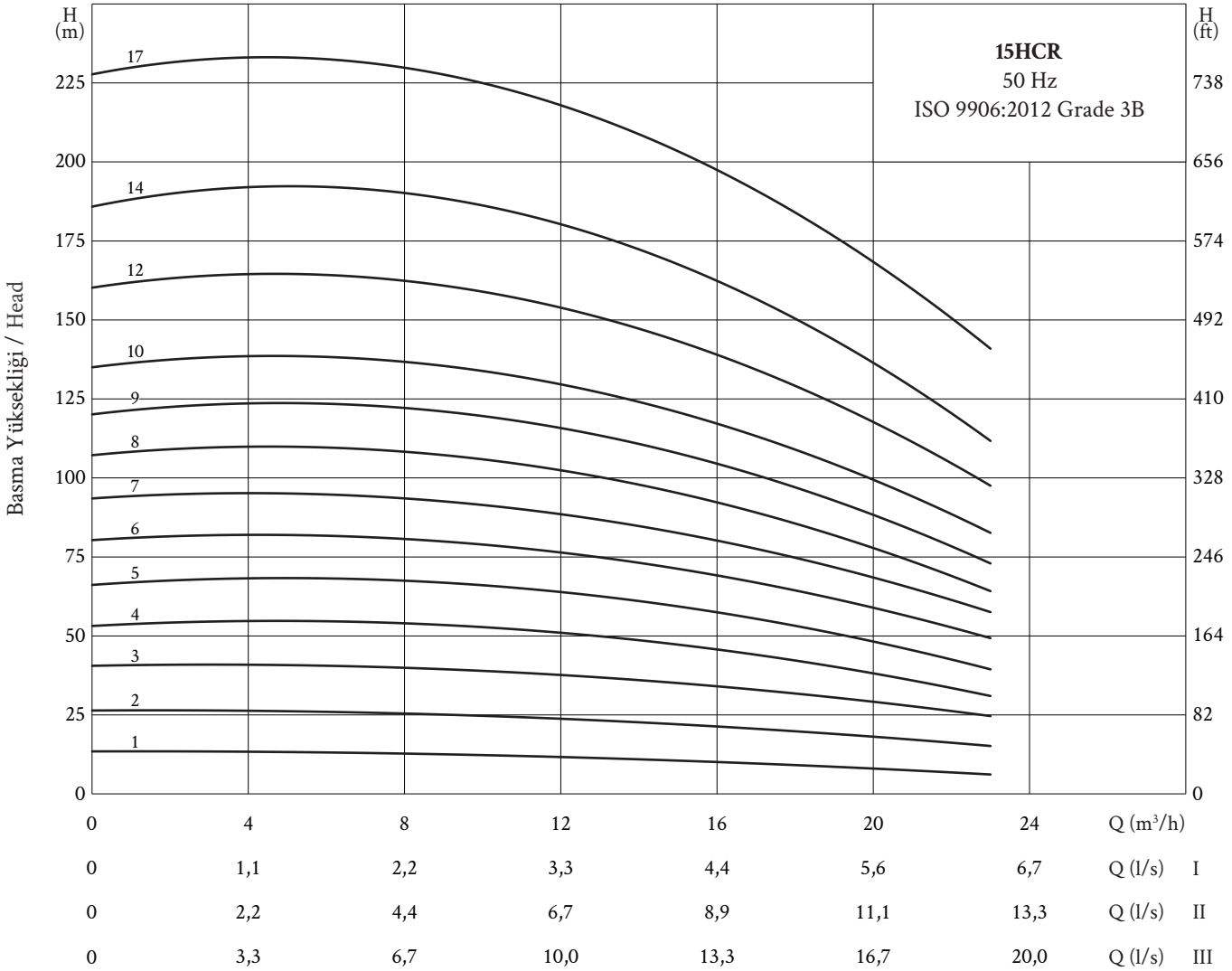

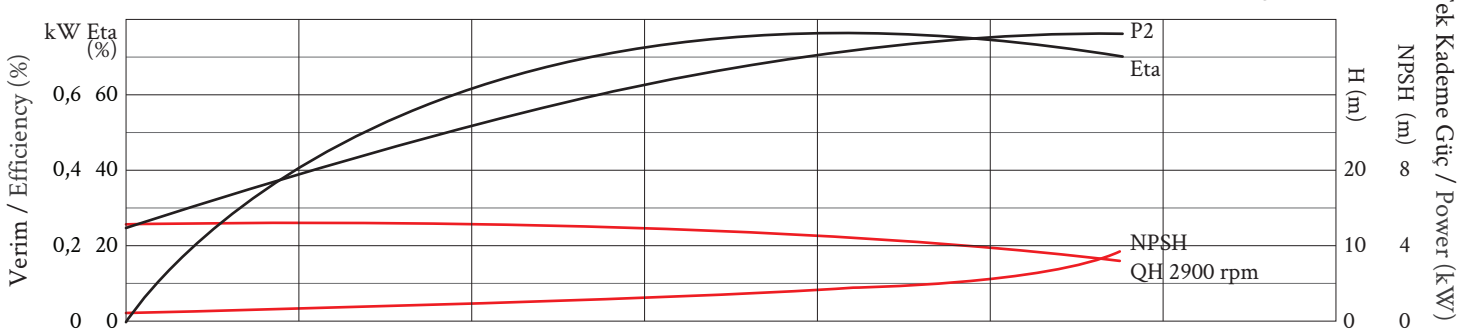

Emiş - Çıkış / Suction - Outlet Tekli / Single: 2” - 2” İkili / Double: 2 1/2” - 2 1/2” Üçlü / Triple: 3” - 3”

Hidrofor Tipi *VMS Pump*	Kademe Sayısı *Stage No.*	HP	kW	V		Basma Yüksekliği / *Head (m)*							
					I 0 (m³/h)	11	13	15	17	19	21	21	23
					II 0 (m³/h)	22	26	30	34	38	42	42	46
					III 0 (m³/h)	33	39	45	51	57	63	63	59
20HCR 1,5/01	1	1,5	1,1	380	11	10	9	8	8	7	6	5	4
20HCR 03/02	2	3	2,2	380	29	27	25	24	21	20	18	14	12
20HCR 05/03	3	5,5	4	380	41	39	37	36	35	30	29	24	22
20HCR 07/04	4	7,5	5,5	380	56	54	52	50	49	43	40	31	29
20HCR 07/05	5	7,5	5,5	380	69	67	66	62	60	58	50	40	36
20HCR 10/06	6	10	7,5	380	83	81	79	75	73	70	61	49	46
20HCR 10/07	7	10	7,5	380	99	97	91	88	86	86	75	57	51
20HCR 15/08	8	15	11	380	113	110	107	104	99	96	85	67	60
20HCR 15/10	10	15	11	380	141	138	133	128	120	115	105	81	75
20HCR 20/12	12	20	15	380	171	169	160	158	149	139	128	103	94
20HCR 20/14	14	20	15	380	200	197	189	179	169	159	145	117	110
20HCR 25/17	17	25	18,5	380	242	239	230	220	207	197	180	143	140

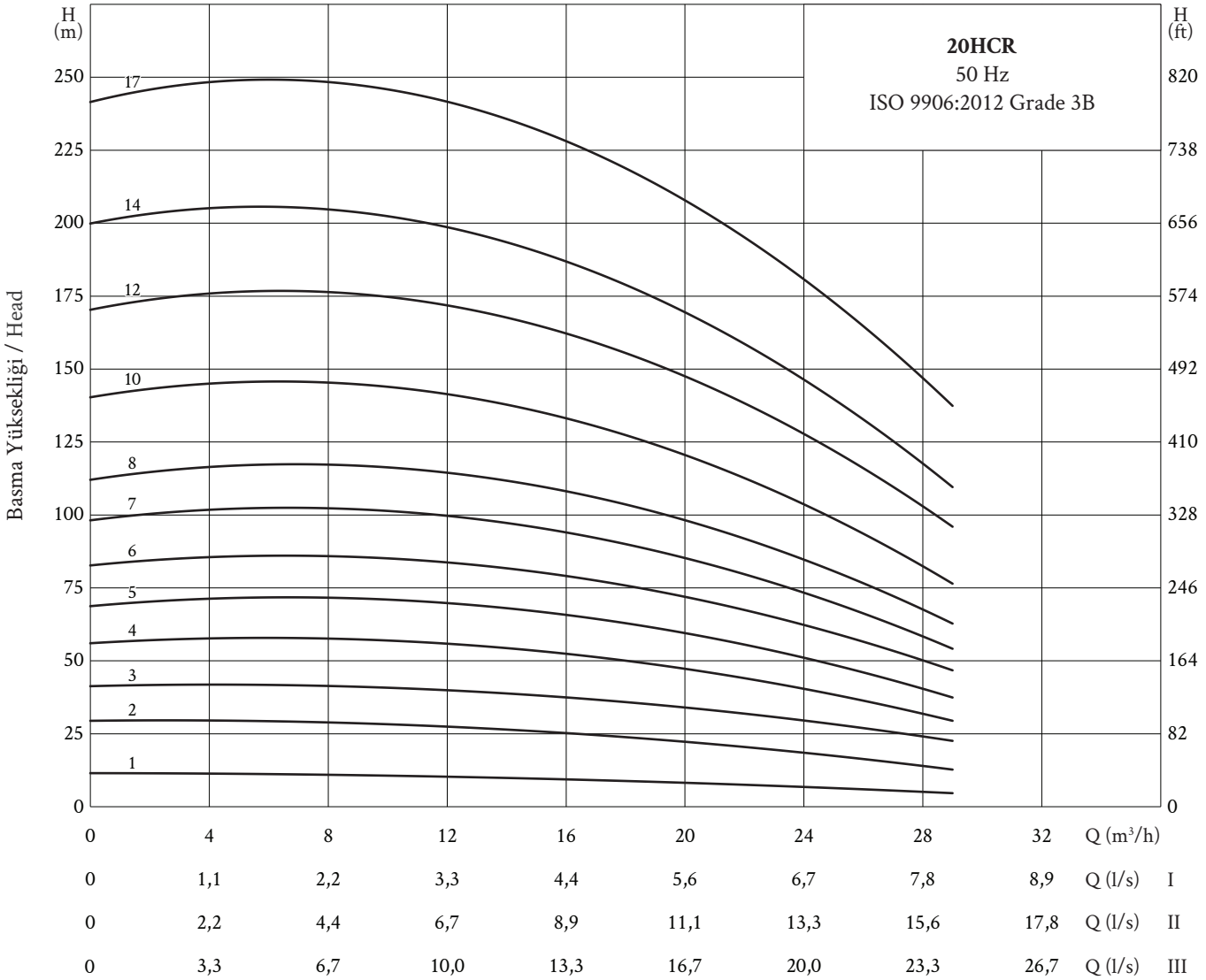

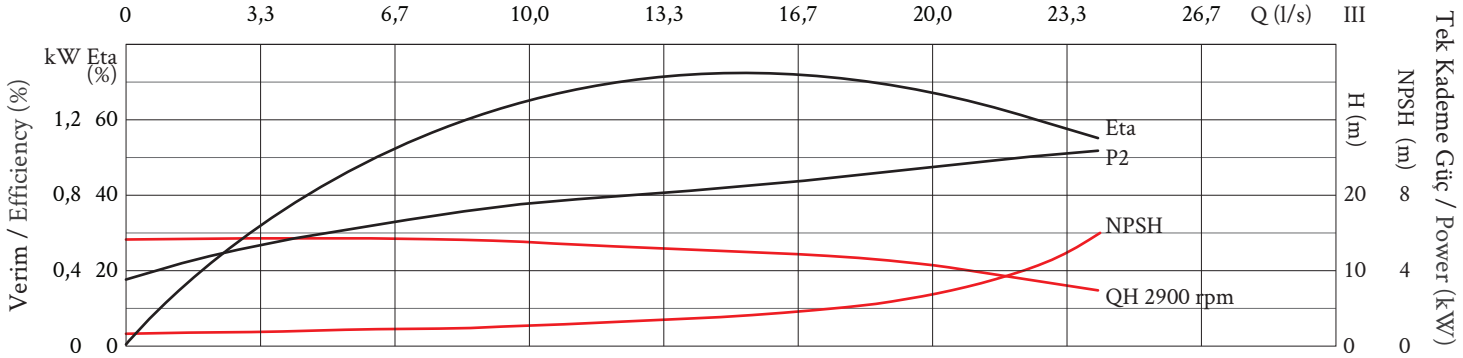

Emiş - Çıkış / Suction - Outlet Tekli / Single: 2 1/2" - 2 1/2" İkili / Double: 3" - 3" Üçlü / Triple: 4" - 4"

Hidrofor Tipi *VMS Pump*	Kademe Sayısı *Stage No.*	HP	kW	V	Basma Yüksekliği / *Head (m)*						
					I 0 (m³/h)	16	20	24	28	32	36
					II 0 (m³/h)	32	40	48	56	64	72
					III 0 (m³/h)	48	60	72	84	96	108
32HCR 02/01-1	1	2	1,5	380	16	15	13	12	11	10	7
32HCR 03/01	1	3	2,2	380	18	17	16	15	14	13	10
32HCR 04/02-2	2	4	3	380	32	31	30	27	25	22	14
32HCR 05/02	2	5,5	4	380	37	36	35	32	31	28	22
32HCR 07/03	3	7,5	5,5	380	56	55	53	50	47	42	33
32HCR 10/04	4	10	7,5	380	75	74	71	67	62	56	45
32HCR 15/05	5	15	11	380	94	93	90	86	79	72	57
32HCR 15/06	6	15	11	380	114	112	107	102	95	86	68
32HCR 20/07	7	20	15	380	133	131	126	119	112	102	82
32HCR 20/08	8	20	15	380	151	149	144	136	128	115	92
32HCR 25/09	9	25	18,5	380	172	170	163	155	146	132	106
32HCR 25/10	10	25	18,5	380	190	188	181	172	159	145	117
32HCR 30/11	11	30	22	380	210	208	200	190	177	161	130
32HCR 30/12	12	30	22	380	226	224	217	207	193	176	142
32HCR 40/13	13	40	30	380	250	248	238	227	213	193	158
32HCR 40/14	14	40	30	380	268	265	256	244	228	208	170

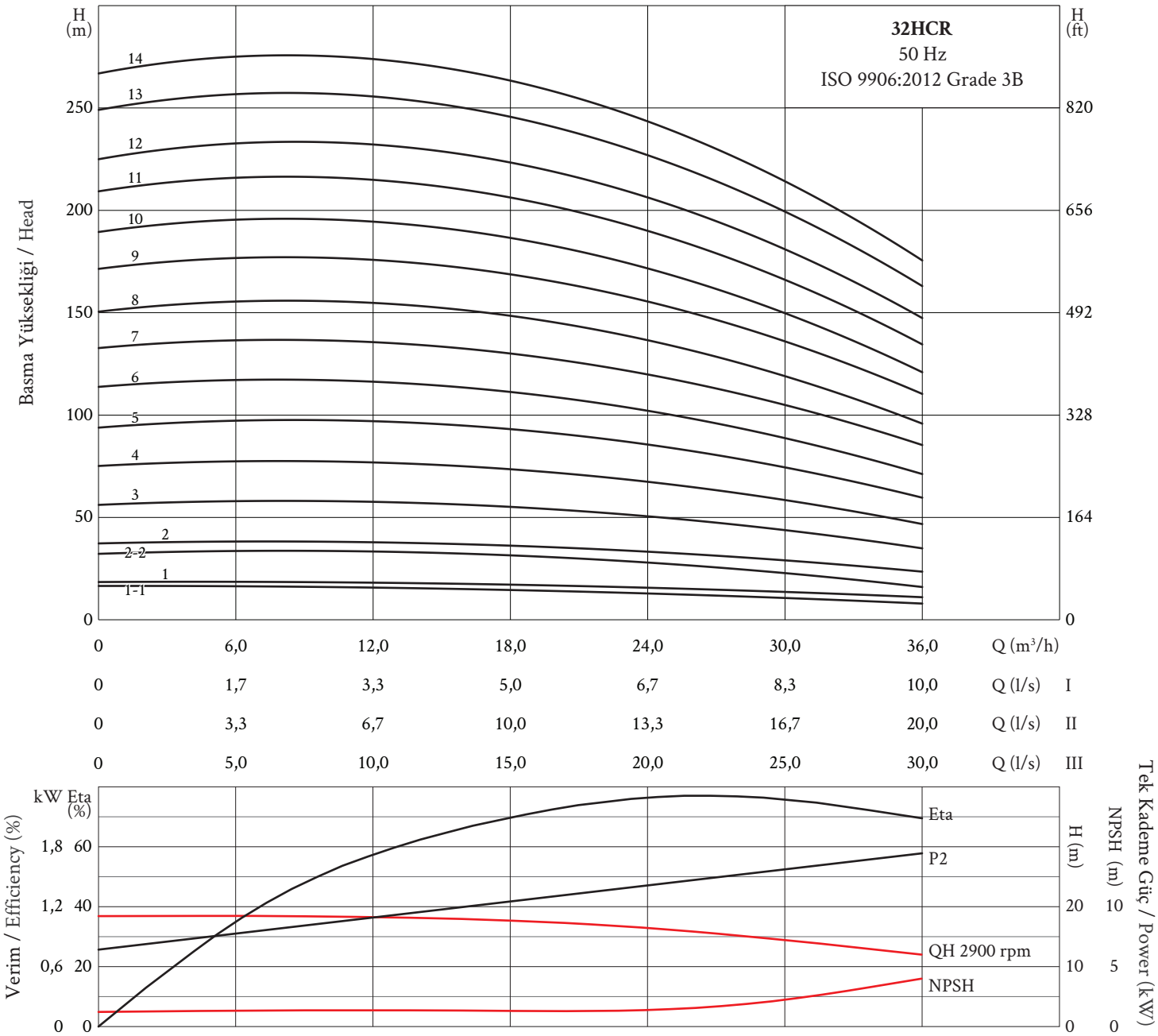

Emiş - Çıkış / Suction - Outlet Tekli / Single: 3” - 3” İkili / Double: 4” - 4” Üçlü / Triple: 5” - 5”

Hidrofor Tipi *VMS Pump*	Kademe Sayısı *Stage No.*	HP	kW	V	Basma Yüksekliği / *Head (m)*							
					I 0 (m³/h)	25	30	35	40	45	50	55
					II 0 (m³/h)	50	60	70	80	90	100	110
					III 0 (m³/h)	75	90	105	120	135	150	165
45HCR 04/01-1	1	4	3	380	21	20	19	18	17	16	13	11
45HCR 05/01	1	5,5	4	380	25	24	23	22	21	19	17	15
45HCR 07/02-2	2	7,5	5,5	380	42	40	38	37	34	31	27	23
45HCR 10/02	2	10	7,5	380	50	48	47	45	42	38	36	32
45HCR 15/03	3	15	11	380	74	72	72	68	65	59	54	48
45HCR 20/04	4	20	15	380	100	98	96	92	87	80	73	65
45HCR 25/05	5	25	18,5	380	126	124	120	115	109	101	92	80
45HCR 30/06	6	30	22	380	152	150	145	138	131	122	111	97
45HCR 40/07	7	40	30	380	178	175	171	164	155	144	132	116
45HCR 40/08	8	40	30	380	203	200	194	187	176	164	150	133
45HCR 40/09-2	9	40	30	380	220	217	211	202	190	176	158	140
45HCR 50/09	9	50	37	380	229	226	219	211	198	187	170	150
45HCR 50/10	10	50	37	380	254	251	244	233	220	205	188	165
45HCR 60/11	11	60	45	380	284	281	272	261	246	229	210	187
45HCR 60/12-2	12	60	45	380	302	298	289	276	260	242	220	195
45HCR 60/12	12	60	45	380	310	304	295	282	268	250	226	201
45HCR 60/13	13	60	45	380	326	320	310	300	284	265	242	220

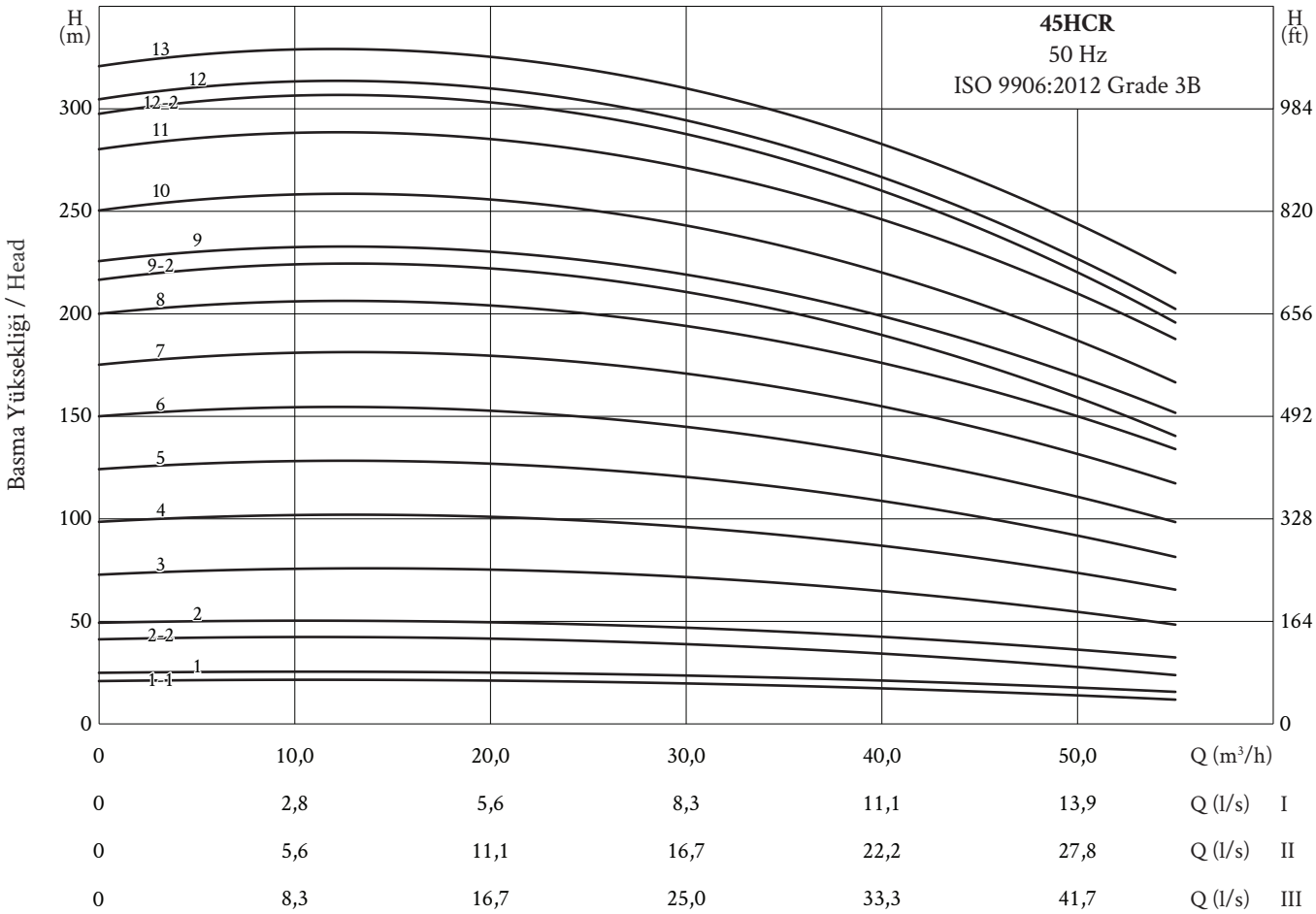

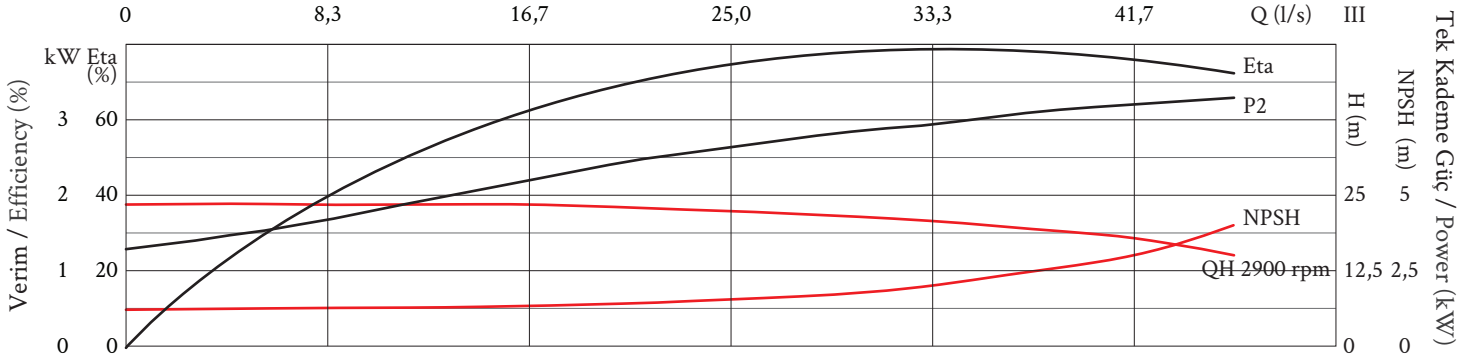

Emiş - Çıkış / Suction - Outlet Tekli / Single: 4” - 4” İkili / Double: 5” - 5” Üçlü / Triple: 6” - 6”

Hidrofor Tipi *VMS Pump*	Kademe Sayısı *Stage No.*	HP	kW	V	Basma Yüksekliği / *Head (m)*						
					I 0 (m³/h)	30	40	50	60	70	80
					II 0 (m³/h)	60	80	100	120	140	160
					III 0 (m³/h)	90	120	150	180	210	240
64HCR 05/01-1	1	5,5	4	380	21	19	18	16	14	12	9
64HCR 07/01	1	7,5	5,5	380	29	27	26	24	22	20	17
64HCR 10/02-2	2	10	7,5	380	41	39	38	36	31	26	19
64HCR 15/02	2	15	11	380	56	54	52	49	46	42	36
64HCR 20/03-1	3	20	15	380	76	74	72	68	63	56	48
64HCR 25/03	3	25	18,5	380	86	84	80	76	71	64	55
64HCR 25/04-2	4	25	18,5	380	97	95	93	88	79	70	59
64HCR 30/04	4	30	22	380	112	110	107	102	94	86	75
64HCR 40/05	5	40	30	380	142	140	136	129	120	110	96
64HCR 40/06-2	6	40	30	380	155	153	149	140	129	115	100
64HCR 50/06	6	50	37	380	171	169	164	155	145	132	116
64HCR 50/07-2	7	50	37	380	183	181	177	166	153	138	120
64HCR 50/07-1	7	50	37	380	191	189	180	170	158	140	125
64HCR 60/07	7	60	45	380	204	200	192	181	169	152	137
64HCR 60/08-2	8	60	45	380	215	210	204	192	180	165	149
64HCR 60/08-1	8	60	45	380	225	220	213	205	190	174	159

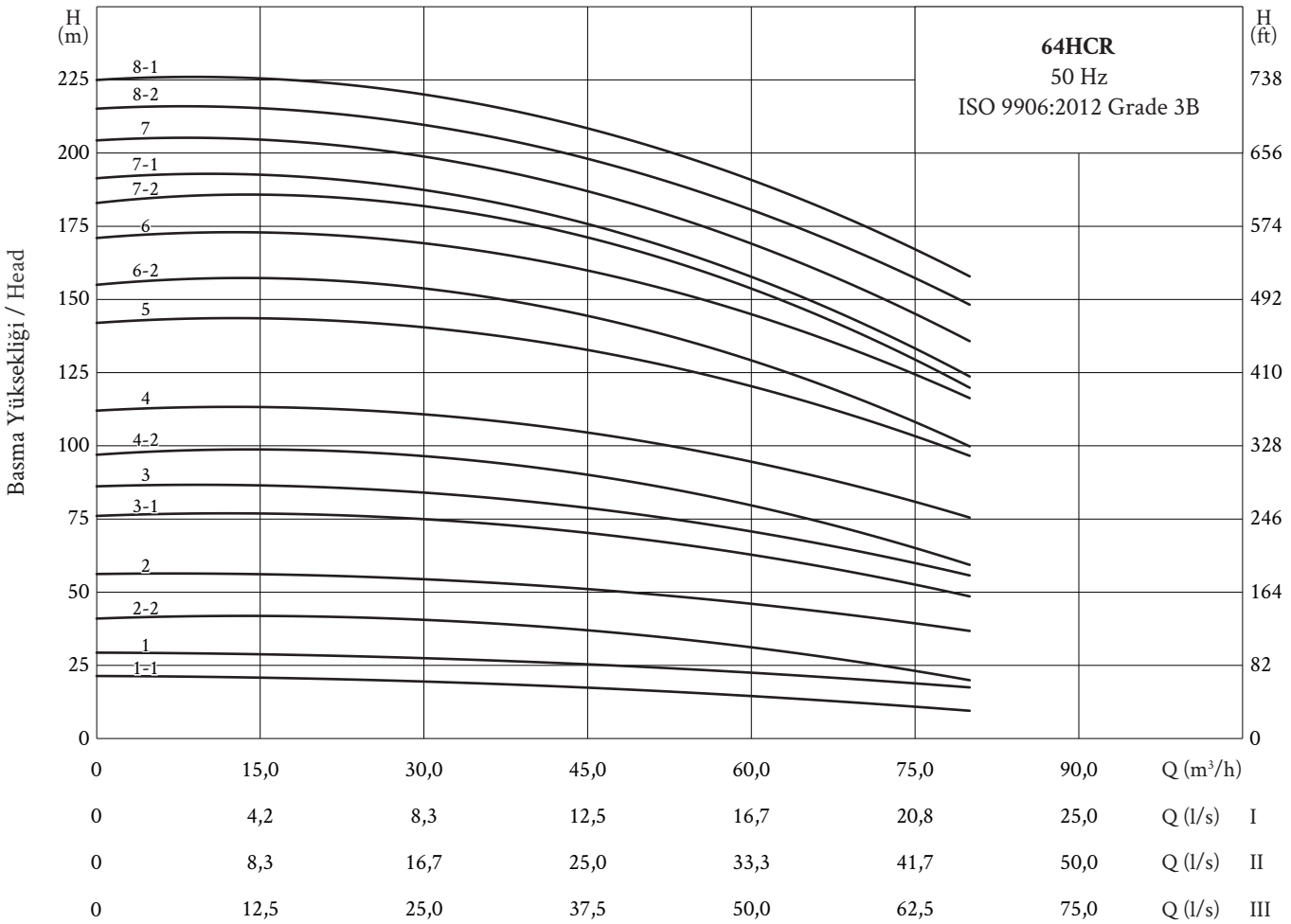

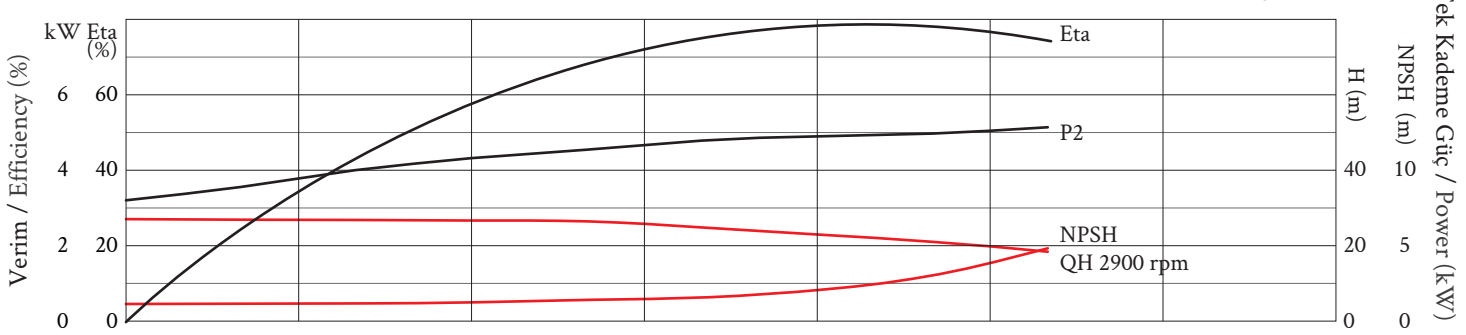

Emiş - Çıkış / Suction - Outlet Tekli / Single: 4” - 4” İkili / Double: 5” - 5” Üçlü / Triple: 5” - 5”

Hidrofor Tipi *VMS Pump*	Kademe Sayısı *Stage No.*	HP	kW	V	Basma Yüksekliği / *Head (m)*							
					I 0 (m³/h)	50	60	70	80	90	100	110
					II 0 (m³/h)	100	120	140	160	180	200	220
					III 0 (m³/h)	150	180	210	240	270	300	330
90HCR 07/01-1	1	7,5	5,5	380	22	21	20	18	16	14	11	7
90HCR 10/01	1	10	7,5	380	27	26	25	24	22	20	17	14
90HCR 15/02-2	2	15	11	380	44	43	42	38	35	30	24	18
90HCR 20/02	2	20	15	380	56	55	53	49	46	43	38	32
90HCR 25/03-2	3	25	18,5	380	73	72	68	64	58	52	44	35
90HCR 30/03	3	30	22	380	87	85	80	76	71	65	58	50
90HCR 40/04	4	40	30	380	117	115	108	103	96	88	80	70
90HCR 50/05	5	50	37	380	147	144	136	128	120	112	100	88
90HCR 60/06	6	60	45	380	178	175	166	156	146	136	123	107

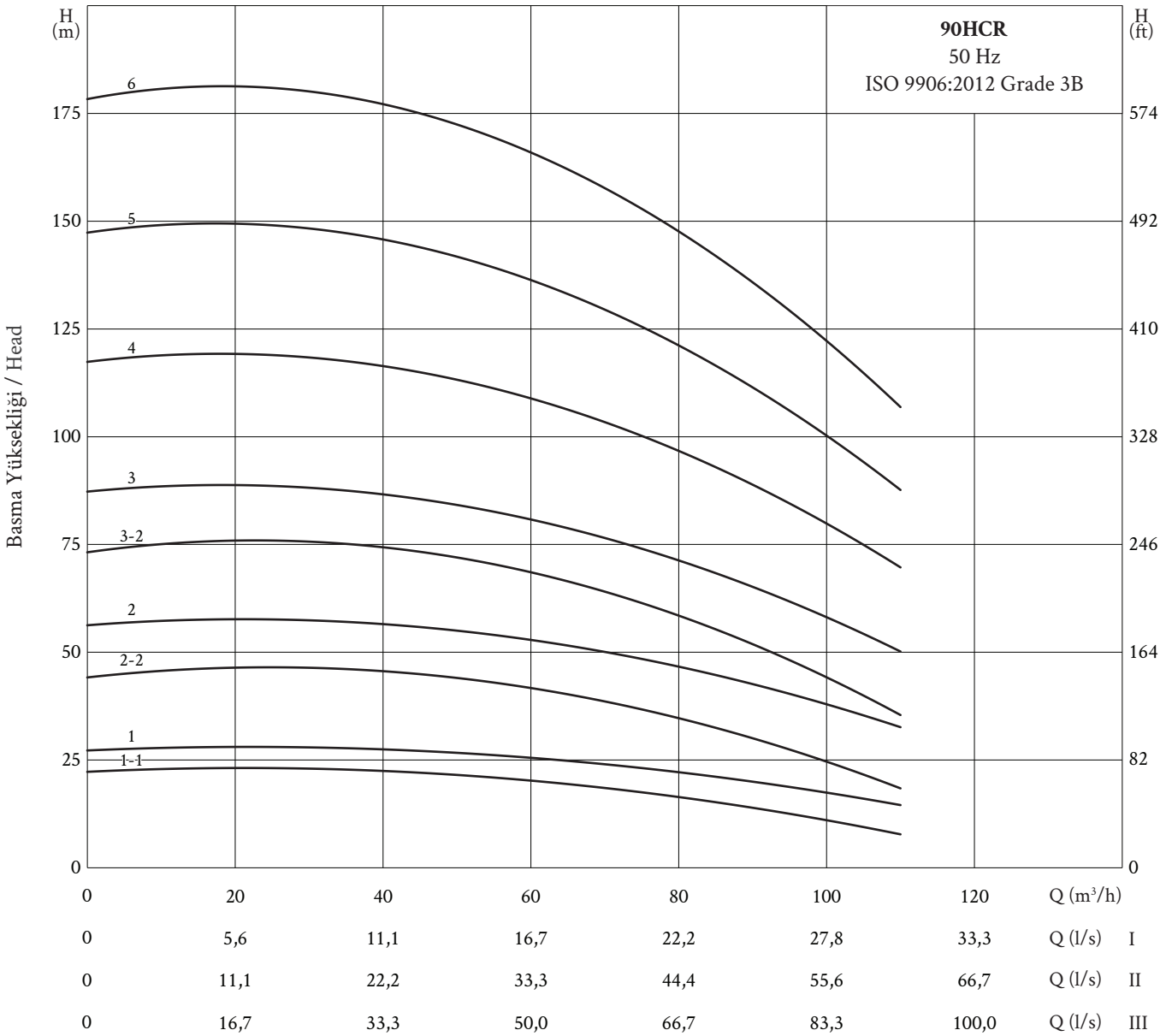

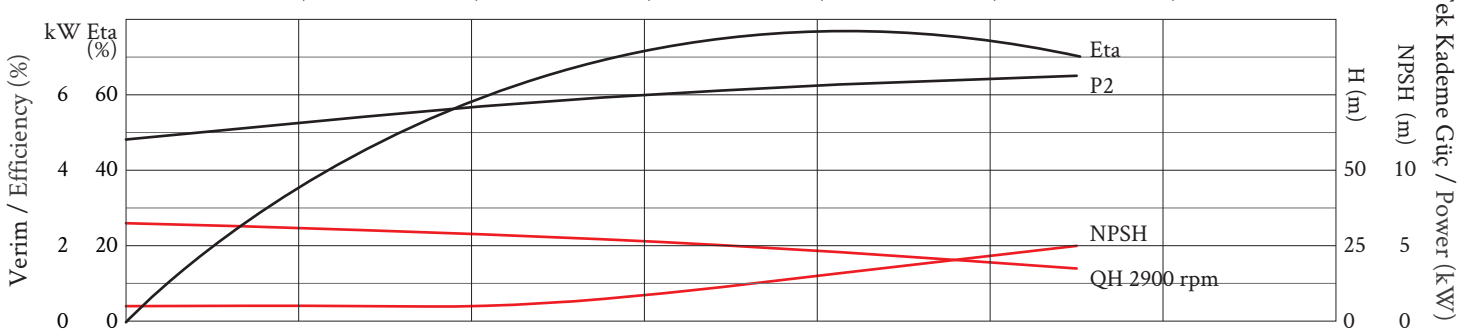

ÜSTÜNEL Dalgıç Pompa-Submersible Pump

Emiş - Çıkış / *Suction - Outlet* Tekli / *Single: 5" - 5"* İkili / *Double: 6" - 6"* Üçlü / *Triple*: 8" - 8"

Hidrofor Tipi *VMS Pump*	Kademe Sayısı *Stage No.*	HP	kW	V		Basma Yüksekliği / *Head (m)*						
					I	0 (m³/h)	40	60	80	100	120	140	160
					II	0 (m³/h)	80	120	160	200	240	280	320
					III	0 (m³/h)	120	180	240	300	360	420	480
120HCR 20/02-2	2	20	15	380		34	32	31	30	28	26	23	16
120HCR 25/02-1	2	25	18,5	380		49	47	46	45	42	35	27	18
120HCR 30/02	2	30	22	380		56	54	53	52	49	44	35	26
120HCR 40/03-1	3	40	30	380		66	64	63	62	57	52	45	35
120HCR 50/03	3	50	37	380		91	89	88	85	80	71	60	45
120HCR 50/04-2	4	50	37	380		100	98	97	94	89	80	70	53
120HCR 60/04	4	60	45	380		115	113	112	108	100	90	72	55
120HCR 75/05	5	75	55	380		132	130	129	125	118	108	91	72

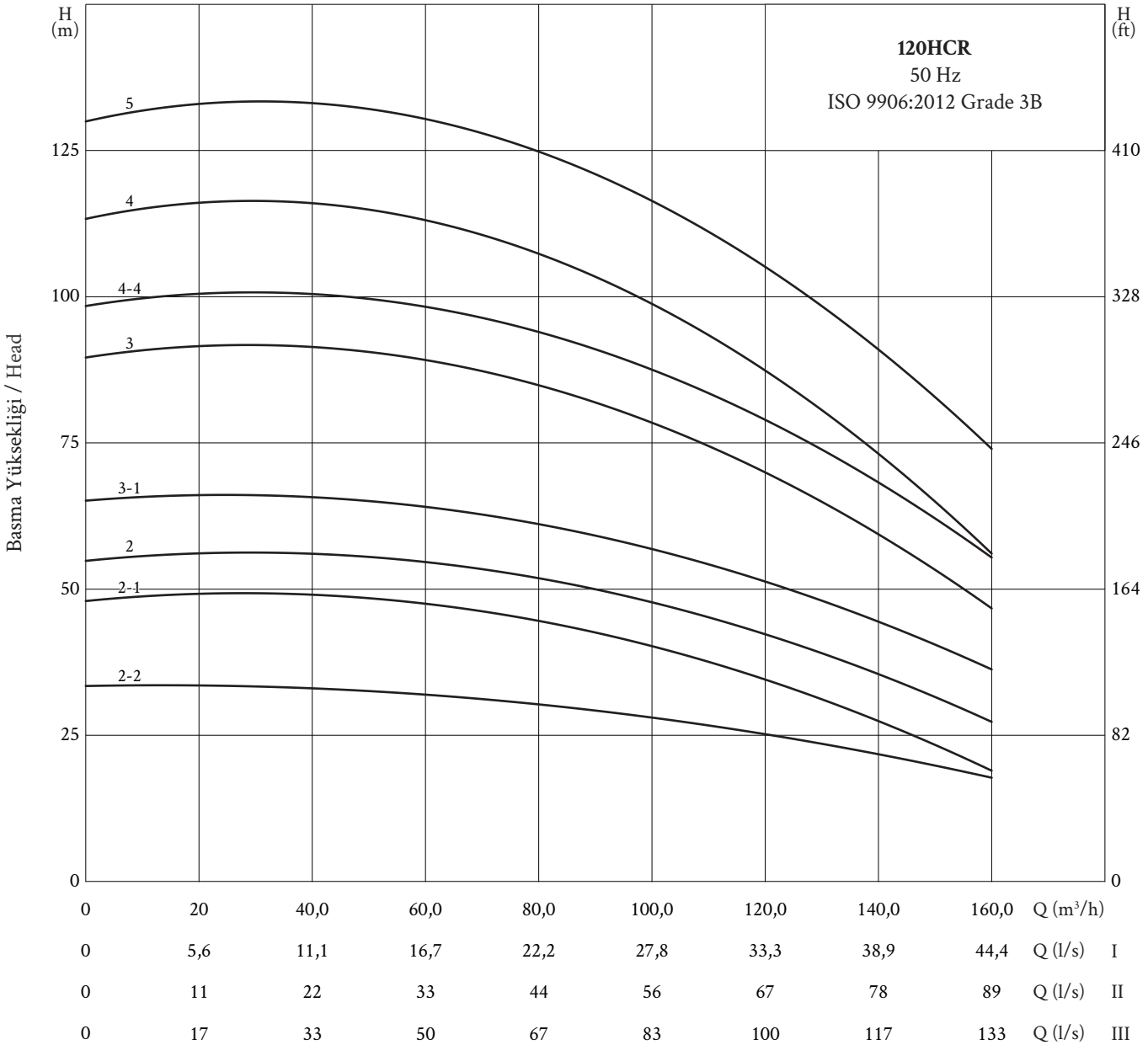

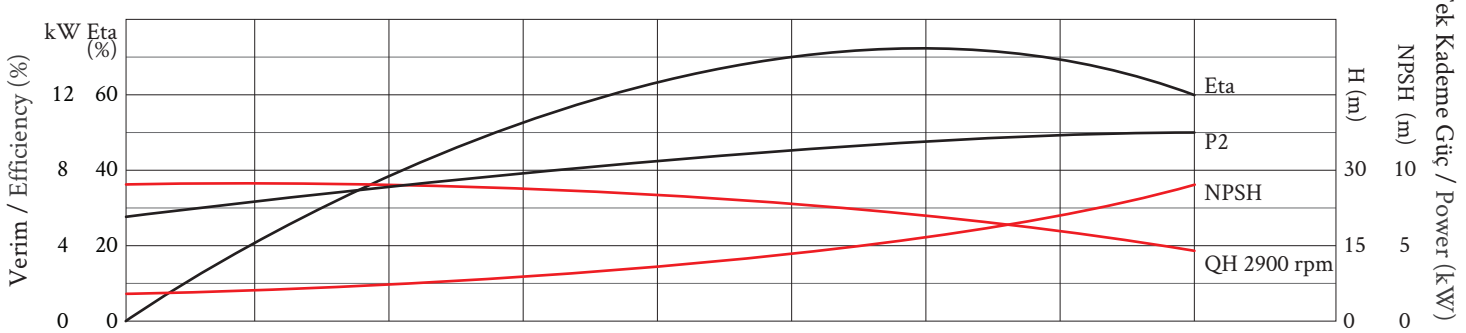

Emiş - Çıkış / Suction - Outlet Tekli / Single: 5” - 5” İkili / Double: 6” - 6” Üçlü / Triple: 8” - 8”

Hidrofor Tipi *VMS Pump*	Kademe Sayısı *Stage No.*	HP	kW	V	Basma Yüksekliği / *Head (m)*								
					I 0 (m³/h)	60	80	100	120	140	160	180	200
					II 0 (m³/h)	120	160	200	240	280	320	360	400
					III 0 (m³/h)	180	240	300	360	420	480	540	600
150HCR 20/01	1	20	15	380	30	29	27	26	24	21	18	13	7
150HCR 30/02-2	2	30	22	380	37	36	35	33	32	28	25	22	13
150HCR 40/02	2	40	30	380	60	58	55	53	49	43	35	25	15
150HCR 50/03-2	3	50	37	380	74	72	69	67	65	60	52	45	27
150HCR 60/03	3	60	45	380	98	95	89	85	80	71	61	48	30
150HCR 75/04-1	4	75	55	380	110	108	105	102	98	90	80	67	46

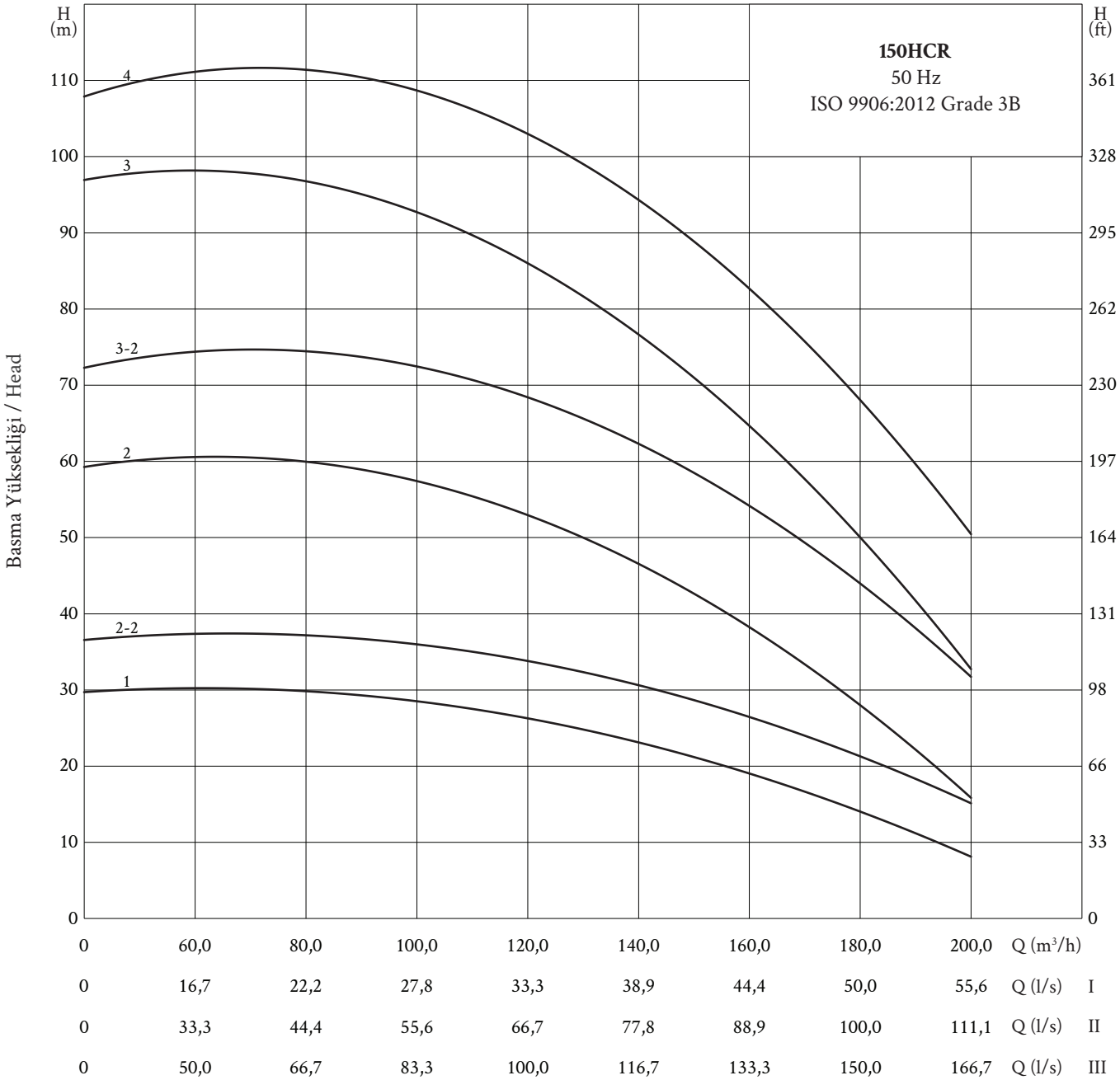

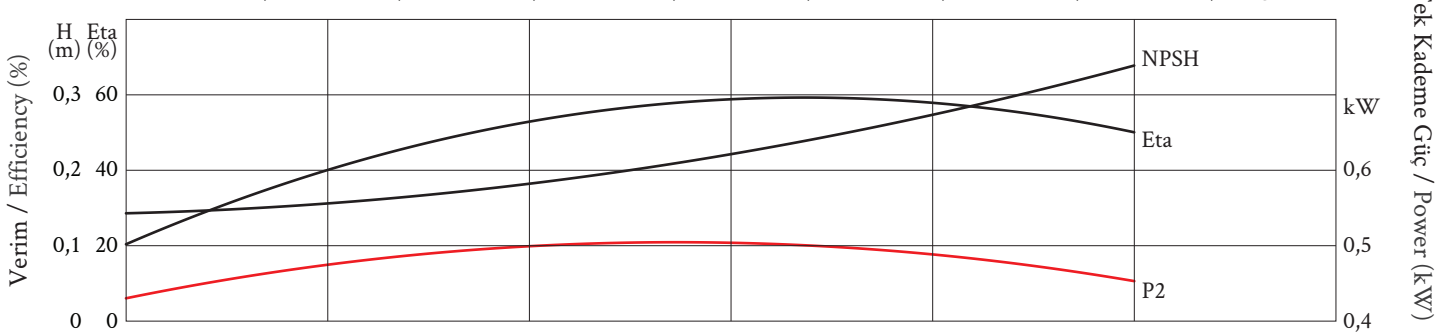

Günlük Tüketim	*Daily Consumption*	Kişi Başı Lt/Gün *L/Day per Person*
Toplu Konut	*Collective Housing*	150-200
Villa - Yazlık	*Summer House*	200-250
Hastane	*Hospital*	200-400
Otel	*Hotel*	200-300
Okul	*School*	5-20
İş Yerleri	*Workplaces*	30-50
Yatılı Okul	*Boarding School*	100-150

Eş Zamanlı Su Tüketim Faktörü	*Simultaneous Water Consumption Factor*	Tip *Type*	"K" Faktörü *"K" Factor*
Konutlar (Daire)	*Housing (flat)*	1-5	0,66
		6-10	0,45
		11-20	0,40
		21-50	0,35
		51-100	0,30
		+100	0,25
Oteller (Yatak)	*Hotels (Bed)*	1-20	0,40
		21-50	0,40-0,30
		+50	0,30-0,20
Hastaneler (Yatak)	*Hospitals (Bed)*	50-500	0,30-0,20
		501-1000	0,20-0,15
		1001-2000	0,15-0,10
İş Merkezleri	*Working Centers*		0,30
Çocuk Yuvaları	*Kindergarden*		0,40
Kışlalar	*Barracks*		0,40-0,30
Okullar	*Schools*		0,30

Basınç ve Debi Hesaplama

Hmin (mSS) = "H" + "Hk" + "Hc"

H: Hidroforun yerleştirildiği yer ile binanın su basılacak en üst noktası arasındaki kot farkı 'metre' ("kat sayısı" x "kat yükseklegi")

Hk: Tesisattaki vana, dirsek, su sayacı, boru vs. kayıpları toplamı 'metre' (Genellikle toplam "h" yüksekliğinin % 20'si olarak alınır.)

Hc: Binanın üst seviyesinde olması istenen çıkış basıncıdır. Genellikle 10-15 m arası alınır.

Qmin (m^3/h) = "Daire sayısı" x "Dairedeki kişi sayısı" x "Kişi basma tüketim" x "K/100"

Head and Flow Calculation

H: Elevator difference between placement of pump and highest pressure point.

Hk: Sum of losses for valves, pipes, elbows, water meters etc. (m). Generally 20 % of total height (h) is taken.

Hc: The needed outlet pressure. Generally takes 10-15 m.

Qmin (m^3/h) = "Number of Flats" x "Resident number of flat" x "per Person" x "K/100"

Kişi Başı Günlük Tüketim

Örnek Hesaplama

6 katlı, 200 yataklı bir hastane binası için; basınç, debi tayini ve pompa seçimi.

Oda Sayısı:	60
Odadaki Kişi Sayısı:	4
Kişi Başı Günlük Tüketim:	300 lt
Eş Zamanlı Kullanım Faktörü:	0,300 mss

H: 6 kat x 3 m (1 kat yüksekliği) = 18 m

Hk: h x 0,20 = 18 x 0,20 = 3,6 m

Gerekli Minimum Basınç "Hmin (mSS)" = 18 + 3,6 + 10 = 31,6 mSS = 3,16 bar

Gerekli Debi "Q" = 60 x 4 x 200 x (0,30 / 1000) = 14,4 m^3/sa

Seçilen Pompa =
- 49HSD 1,5/09 (Üçlü)*(Triple)*
- 5HCR 1,5/05 (Üçlü)*(Triple)*

Daily Consumption Per Person

Sample Calculation

Pump selection, pressure and flow determination for, 6 floors 200 bed hospital building.

Room Number:	*60*
Nubmer of People in the Room:	*4*
Daily Consumption Per Person:	*300 lt*
Simultaneous Water Consumption Factor	*0,300 mss*

H: 6 floor x 3 m (1 floor height) = 18 m

Hk: h x 0,20 = 18 x 0,20 = 3,6 m

Required Minimum Pressure "Hmin (mSS)" = 18 + 3,6 + 10 = 31,6 mSS = 3,16 bar

Required Flow = 60 x 4 x 200 x (0,30 / 1000) = 14,4 m^3/h

Selected Pump
- 624HSM 03/04 (Tekli)*(Single)*
- 15HCR 04/03 (Tekli)*(Single)*

Ölçüler / *Dimensions*

NORİL HİDROFOR POMPA
NORYL VMS PUMPS

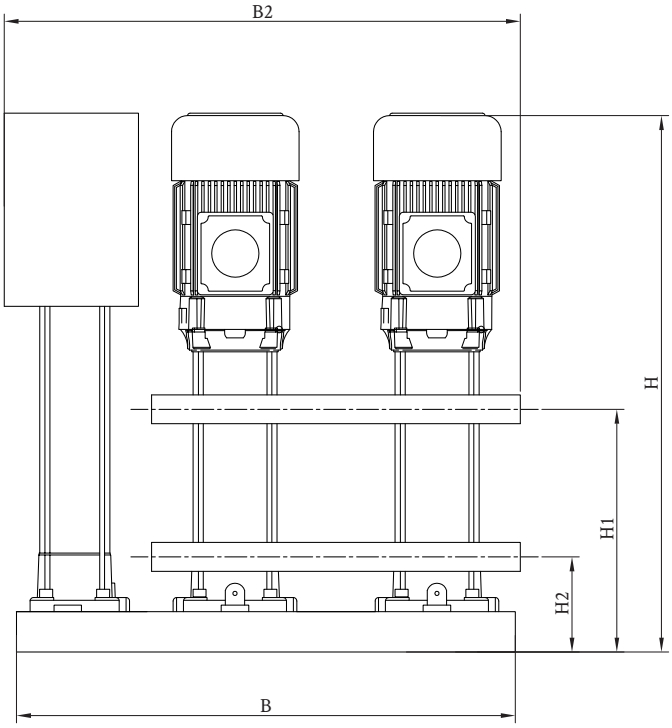

IN-LINE PASLANMAZ HİDROFOR POMPA
IN-LINE STAINLESS STEEL VMS PUMPS

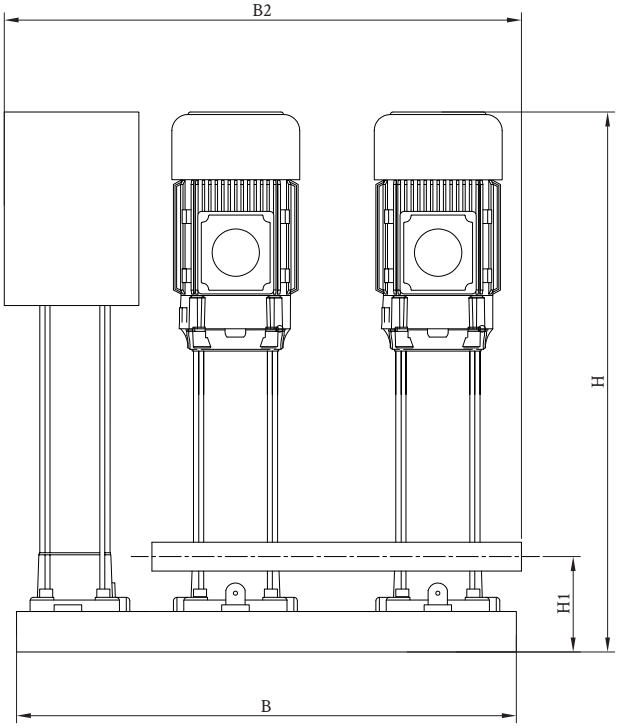

ÜSTÜNEL
Dalgıç Pompa-Submersible Pump

DRENAJ POMPA

DRAINAGE PUMPS

D 120 GG DRENAJ POMPA / *D 120 GG DRAINAGE PUMPS*

Pompa Tipi *Pump Type*	Motor HP	Motor kW	Motor V	Amper *Ampere*	Boy *Length (cm)*	Ağırlık *Weight (kg)*	Basma Yüksekliği / *Head (m)* 0 (l/s)	0,83	1,67	2,50	4,17	5,00	5,83	6,67	7,50	8,33	9,17
							0 (m³/h)	3,0	6,0	9,0	15,0	18,0	21,0	24,0	27,0	30,0	33,0
D 120GG 1,5HP-M	1,5	1,1	220	9,2	51	30,5	9,7	9,5	9,3	8,8	7,6	6,9	6,2	5,3	4,3	3,2	2,0
D 120GG 2HP-M	2	1,3	220	11,5	52	31,5	11,8	11,6	11,4	10,9	9,7	9,0	8,2	7,2	6,2	4,9	3,3

D 1355 GG DRENAJ POMPA / *D 135 GG DRAINAGE PUMPS*

Pompa Tipi *Pump Type*	Motor HP	Motor kW	Motor V	Amper *Ampere*	Boy *Length (cm)*	Ağırlık *Weight (kg)*	Basma Yüksekliği / *Head (m)* 0 (l/s)	0,83	1,67	2,50	4,17	5,00	5,83	6,67	7,50	8,33	9,17
							0 (m³/h)	3,0	6,0	9,0	15,0	18,0	21,0	24,0	27,0	30,0	33,0
D 135GG 2HP-T	2	1,3	380	3,9	53	39	11,8	11,6	11,4	10,9	9,7	9,0	8,2	7,2	6,2	4,9	3,3
D 135GG 3HP-T	3	2,2	380	5,0	54	40	13,9	14,3	13,8	13,5	13,0	11,7	10,9	10,0	9,0	8,0	7,0

ENDÜSTRİYEL TİP UZUN SÜRE ÇALIŞMAYA DAYANIKLI DRENAJ POMPALARI - 2900 d/dk
INDUSTRIAL TYPE HEAVY DUTY DRAINAGE PUMPS - 2900 rpm

Pompa Tipi *Pump Type*	Motor HP	Motor kW	Motor V	Ağırlık *Weight (kg)*	Çıkış *Outlet*	Basma Yüksekliği / *Head (m)* 0 (l/s)	2,78	4,17	5,56	6,94	8,33	11,11
						0 (m³/h)	10	15	20	25	30	40
DVT22/130	3	2,2	380	34	2”	16	14	13	12	11	8,5	4,5

Pompa Tipi *Pump Type*	Motor HP	Motor kW	Motor V	Ağırlık *Weight (kg)*	Çıkış *Outlet*	Basma Yüksekliği / *Head (m)* 0 (l/s)	5,56	8,33	11,11	13,89	16,67	19,44
						0 (m³/h)	20	30	40	50	60	70
DVT44/158	5,5	4	380	47	4”	16	15	14	13	11	8	4

Pompa Tipi *Pump Type*	Motor HP	Motor kW	Motor V	Ağırlık *Weight (kg)*	Çıkış *Outlet*	Basma Yüksekliği / *Head (m)* 0 (l/s)	11,11	13,89	16,67	19,44	22,22	25,00
						0 (m³/h)	40	50	60	70	80	90
DVT45/156	7,5	5,5	380	53	4”	22	16	13,5	10,5	8	5	3

Max. Su Sıcaklığı / *Max Water Temperature: 40°C*
İzolasyon Sınıfı / *Isolation Class: F*
Max. Partikül Çapı / *Max. Particle Dia. : 8,5 mm*
Pompa Gövdesi: Paslanmaz Çelik / *Pump Body: Stainless Steel*

ENDÜSTRİYEL TİP ATIK SU DRENAJ POMPALARI - 2900 d/dk
INDUSTRIAL TYPE WASTE WATER DRAINAGE PUMPS - 2900 rpm

Pompa Tipi *Pump Type*	Motor			Ağırlık *Weight (kg)*	Çıkış *Outlet*	Basma Yüksekliği / *Head (m)*							
	HP	kW	V			0 (l/s)	1,39	2,78	4,17	5,56	6,94	8,33	11,11
						0 (m³/h)	5	10	15	20	25	30	40
DVY24/171	5,5	4	380	78	2”	26	24	22	20	18	15	12	6

Pompa Tipi *Pump Type*	Motor			Ağırlık *Weight (kg)*	Çıkış *Outlet*	Basma Yüksekliği / *Head (m)*						
	HP	kW	V			0 (l/s)	1,39	2,78	4,17	5,56	6,94	8,33
						0 (m³/h)	5	10	15	20	25	30
DVY44/136	7,5	4	380	78	4”	18	15	13	12	9,5	7	4,5

Max. Su Sıcaklığı / *Max Water Temperature: 40°C*
İzolasyon Sınıfı / *Isolation Class: F*
Max. Partikül Çapı / *Max. Particle Dia. : 8,5 mm*

ENDÜSTRİYEL TİP KARIŞTIRICILI DRENAJ POMPALARI - 2900 d/dk
INDUSTRIAL TYPE MIXER WATER DRAINAGE PUMPS - 2900 rpm

Pompa Tipi *Pump Type*	Motor			Ağırlık *Weight (kg)*	Çıkış *Outlet*	Basma Yüksekliği / *Head (m)*			
	HP	kW	V			0 (l/s)	2,78	5,56	6,94
						0 (m³/h)	10	20	25
DPY22/142	3	2,2	380	47	2”	19	14	9	6

Pompa Tipi *Pump Type*	Motor			Ağırlık *Weight (kg)*	Çıkış *Outlet*	Basma Yüksekliği / *Head (m)*					
	HP	kW	V			0 (l/s)	2,78	5,56	6,94	8,33	9,72
						0 (m³/h)	10	20	25	30	35
DPY34/166	5,5	4	380	79	3”	22	19	16	14	12	9

ENDÜSTRİYEL TİP KARIŞTIRICILI DRENAJ POMPALARI - 1450 d/dk
INDUSTRIAL TYPE MIXER WATER DRAINAGE PUMPS - 1450 rpm

Pompa Tipi *Pump Type*	Motor			Ağırlık *Weight (kg)*	Çıkış *Outlet*	Basma Yüksekliği / *Head (m)*							
	HP	kW	V			0 (l/s)	5,00	12,78	19,44	25,00	27,78	33,33	37,50
						0 (m³/h)	18	46	70	90	100	120	135
DPY45/245	7,5	5,5	380	150	4”	16	15	13	11	9	7,5	4,5	2

Pompa Tipi *Pump Type*	Motor			Ağırlık *Weight (kg)*	Çıkış *Outlet*	Basma Yüksekliği / *Head (m)*							
	HP	kW	V			0 (l/s)	10,00	13,33	21,11	26,67	31,11	35,00	47,22
						0 (m³/h)	36	48	76	96	112	126	170
DPY67/260	10	7,5	380	180	6”	18	17	16	14	12	10	8,5	2

Max. Su Sıcaklığı / *Max Water Temperature: 40°C*
İzolasyon Sınıfı / *Isolation Class: F*
Max. Partikül Çapı / *Max. Particle Dia.*
DPY22, DPY34: 10 mm.
DPY45, DPY67: 30 mm.

ÜSTÜNEL

Dalgıç Pompa-Submersible Pump

Üstünel Pompa ve Makine Sanayi Ticaret A.S
Atatürk Organize Sanayi Bölgesi 10002 Sk. No.20
Çiğli - İZMİR / TÜRKİYE

www.ustunel.com.tr
ustunel@ustunel.com.tr